NORDIC

TECHNICAL GUIDE
NORDIC LAM+

NS-GT5

ASD

VERSION
2022-02-01

Mass Timber Construction

NORDIC LAM+ TECHNICAL GUIDE

NORDIC LAM+

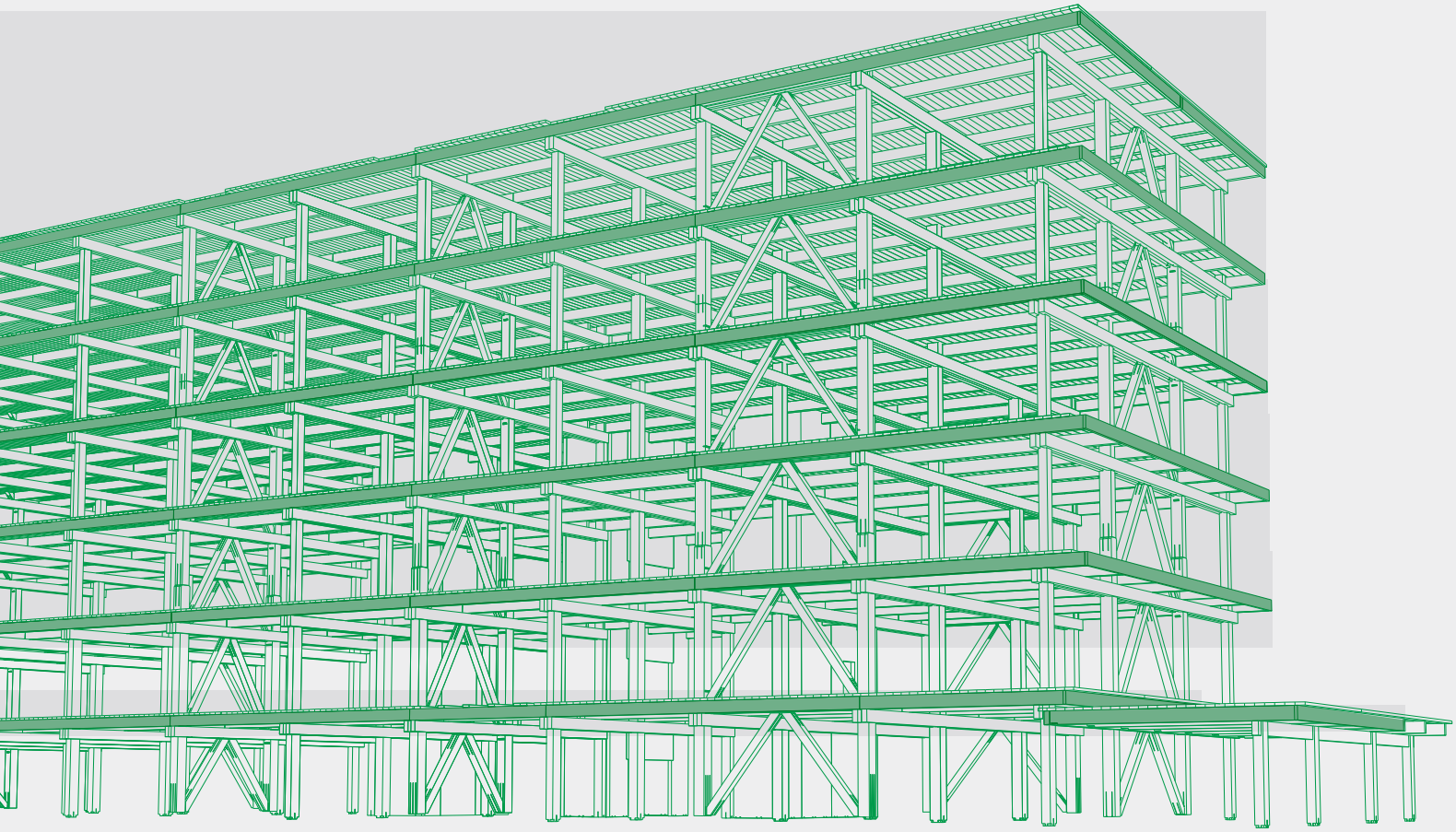

NORDIC STRUCTURES

ABOUT NORDIC

NORDIC
STRUCTURES

Nordic Structures is the leading innovator in mass timber construction. Its resource comes from responsibly managed lands within the regional boreal forest. Vertical integration, from forest to structure, bolstered by Nordic's experienced design and development team, ensures consistent quality and unparalleled level of service.

514-871-8526
1 866 817-3418

HEAD OFFICE

Nordic Structures
100-1100 Canadiens-de-Montréal Avenue
Montréal, Québec H3B 2S2
www.nordic.ca

GENERAL INFORMATION

info@nordic.ca

TECHNICAL SUPPORT

arch@nordic.ca

TABLE OF CONTENTS

NORDIC LAM+ 1

STRUCTURE 2

STRUCTURAL DETAILS 3

ARCHITECTURAL DETAILS 4

ADDITIONAL INFORMATION 5

ENGINEERED WOOD PRODUCTS

Standard size products available
from our distributors

NS-GT3

NORDIC JOIST

NORDIC I-JOISTS

Nordic I-joists are composed of sawn lumber flanges connected by a structural oriented strand board and bonded together with exterior-grade adhesives.

NI-40x — RESIDENTIAL SERIES

2×3 1950f MSR, 3/8 in. web
Depths
9-1/2, 11-7/8 and 14 in.

NI-60

2×3 2100f MSR, 3/8 in. web
Depths
9-1/2, 11-7/8, 14 and 16 in.

NI-80

2×4 2100f MSR, 3/8 in. web
Depths
9-1/2, 11-7/8, 14 and 16 in.

NI-90

2×4 2400f MSR, 7/16 in. web
Depths
11-7/8, 14 and 16 in.

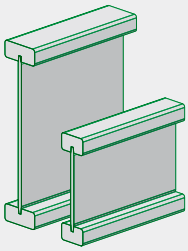

NI-80x — COMMERCIAL SERIES

2×4 2100f MSR, 7/16 in. web
Depths
18, 20, 22 and 24 in.

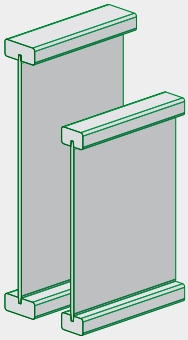

RIM BOARDS
1-1/8 in. width
I-joist compatible depths

NS-GT4

NORDIC LAM

NORDIC LAM GLUED-LAMINATED TIMBER

Nordic Lam glued-laminated timber of industrial appearance classification consists of small wood laminations bonded together in parallel using structural adhesives.

BEAMS AND HEADERS

Widths
1-3/4, 3-1/2, 5-1/2 and 7 in.
Depths
9-1/2, 11-7/8, 14, 16, 18, 20, 22 and 24 in.
Lengths*
Up to 48 ft
Stress grade
24F-1.9E

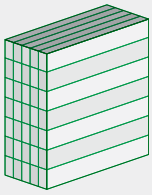

COLUMNS

Widths
3-1/2, 5-1/2 and 7 in.
Depths
3-1/2, 5-1/2 and 7 in.
Lengths*
Up to 48 ft
Stress grade
ES12

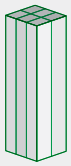

STUDS

Widths
1-1/2 and 1-3/4 in.
Depths
5-1/2 and 7-1/4 in.
Lengths*
Up to 48 ft
Stress grade
ES11

* Larger sizes available upon request

MASS TIMBER CONSTRUCTION

Products custom-manufactured
and machined for major projects

NS-GT5

NORDIC LAM+

NORDIC LAM+ GLUED-LAMINATED TIMBER

Nordic Lam+ glued-laminated timber of architectural appearance classification consists of small wood laminations bonded together in parallel using structural adhesives.

BEAMS AND COLUMNS

Widths*
38, 86, 137, 184, 215, 241, 292, 346, 395, 448, 502, 552 and 603 mm
(1-1/2, 3-3/8, 5-3/8, 7-1/4, 8-1/2, 9-1/2, 11-1/2, 13-5/8, 15-1/2, 17-5/8, 19-3/4, 21-3/4 and 23-3/4 in.)

Depths*
From 67 to 2435 mm
(2-5/8 to 95-7/8 in.)

Lengths*
Up to 24.4 m (80 ft)

Stress grade
24F-ES/NPG

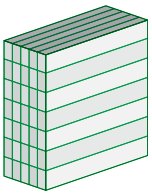

DECKING

Thicknesses*
38, 44, 54 and 89 mm
(1-1/2, 1-3/4, 2-1/8 and 3-1/2 in.)

Widths
203, 305 and 406 mm
(8, 12 and 16 in.)

Lengths
Up to 18.9 m (62 ft)

Stress grades
ES11, except 89 mm thickness in 20F-ES/CPG

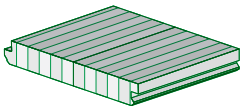

* Larger sizes available upon request

NS-GT6

NORDIC X-LAM

NORDIC X-LAM CROSS-LAMINATED TIMBER

Nordic X-Lam cross-laminated timber is made of at least three orthogonal layers of graded sawn lumber that are laminated by gluing with structural adhesives.

SLABS AND PANELS

Layup combinations
89-3s, 105-3s,
143-5s, 175-5s,
197-7s, 213-7l, 245-7s, 245-7l
and 267-9l

Maximum sizes
2.70 × 19.5 m (106-1/4 in. × 64 ft)

Stress grade
E1 (L 1950Fb and T No. 3/Stud)

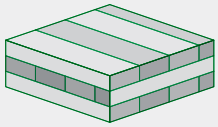

NORDIC

TECHNICAL GUIDE
NORDIC LAM+

NS-GT5

ASD

VERSION
2022-02-01

NORDIC LAM+

1

NORDIC
STRUCTURES

GLULAM

NORDIC LAM+

NORDIC LAM+ GLUED-LAMINATED TIMBER

Nordic Lam+ glued-laminated timber of architectural appearance classification consists of small wood laminations bonded together in parallel using structural adhesives.

BEAMS AND COLUMNS

Widths*
38, 86, 137, 184, 215, 241, 292,
346, 395, 448, 502, 552 and 603 mm
(1-1/2, 3-3/8, 5-3/8, 7-1/4, 8-1/2, 9-1/2, 11-1/2,
13-5/8, 15-1/2, 17-5/8, 19-3/4, 21-3/4 and 23-3/4 in.)

Depths*
From 67 to 2435 mm
(2-5/8 to 95-7/8 in.)

Lengths*
Up to 24.4 m (80 ft)

Stress grade
24F-ES/NPG

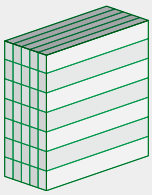

DECKING

Thicknesses*
38, 44, 54 and 89 mm
(1-1/2, 1-3/4, 2-1/8 and 3-1/2 in.)

Widths
203, 305 and 406 mm
(8, 12 and 16 in.)

Lengths
Up to 18.9 m (62 ft)

Stress grades
ES11, except 89 mm thickness in 20F-ES/CPG

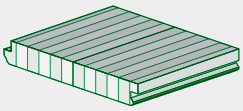

* Larger sizes available upon request

Nordic Lam+ – Specification Guide

Specifications

Glued-laminated timber (glulam) products may be used in dry service conditions, such as in most covered structures, where the average equilibrium moisture content of solid wood is less than 16 percent, as well as wet service conditions when accounted for in the design.

Additional considerations for wet use include, but are not limited to, service condition factors for the capacity, dimensional changes, architectural details, wood protection and maintenance.

Master format 06 18 00

REFERENCE STANDARD

.1 ANSI A190.1-[2017], Standard for Wood Products – Structural Glued Laminated timber.

ACTION AND INFORMATION SUBMITTALS

.1 Submit the product report published by a certification agency accredited by the International Accreditation Service at completion of fabrication.

MATERIALS

.1 Laminating stock: Spruce-Pine-Fir, [FSC certified]
.2 Sealer: Penetrating type, clear, non-yellowing liquid (Sansin KP-12UVW)
.3 Preservative: [Specify as required]
.4 Fire retardant: [Specify as required]

FABRICATION

.1 Stress grade: [bending, compression and/or tension members 24F-ES/NPG (beams, columns, and ties)] [and/or] [ES11 or 20F-ES/CPG (decking)]
.2 Service grade: [Interior] [Exterior]
.3 Appearance classification: [Architectural]
.4 Fire resistance: [Specify as required]

ERECTION

.1 Erect glued-laminated timber members in accordance with erection drawings issued for construction.

For the detailed specification guide: https://www.nordic.ca/en/documentation/technical-documents

Nordic Lam+ – Appearance Classifications

The following example of glued laminated timber appearance classification is for reference only. These requirements are based on the appearance at the time of manufacturing. The actual glulam product appearance requirements are recommended to be agreed upon between the buyer and the seller.

Architectural Appearance

A high quality appearance suitable for applications where appearance is an important but not overriding consideration. Specific characteristics of this classification are:

- **Lamination Characteristics** – The wide face of laminations exposed to view are free of loose knots. Otherwise, laminations are permitted to possess the natural growth characteristics of the lumber grade.
- **Void Repair** – In exposed surfaces, voids measuring over 3/4 in. (19 mm) long are filled with a wood-tone colored filler that reasonably blends with the final product or with wood inserts selected for similarity to the grain and color of the adjacent wood. Exception: A void (not repaired) is permitted to be longer than 3/4 in. (19 mm) if its area does not exceed 1/2 in.^{2} (3.23 cm^2). Open knot holes on the wide face of laminations exposed to view are filled.
  - **Pencil Wane** – All occurrences of pencil wane are repaired, regardless of length. Pencil wane is permitted to be repaired using filler up to a maximum length of 8 in. (203 mm). For pencil wane longer than 8 in. (203 mm), wood inserts are used for repairs.
  - **Edge Joints** – Voids greater than 1/16 in. (2 mm) wide in edge joints appearing on the wide face of laminations exposed to view are filled with wood-tone colored filler that reasonably blends with the final product.
- **Surfacing** – Exposed faces are surfaced smooth. Misses, wane, and low laminations are not permitted. Occasional repaired pencil wane is permitted subject to the restrictions above (see Pencil Wane).
- **Eased Corners** – The corners of the member exposed to view in the final structure are eased with a minimum radius of 1/8 in. (3 mm) or equivalent chamfer.

Industrial Appearance

An appearance classification normally suitable for use in concealed applications where appearance is not of primary concern. For more details on industrial grade Nordic Lam products, see the technical guide GT4.

Nordic Lam+ – Certifications

Product Certifications

Nordic Lam glued-laminated timber (glulam) products, certified by APA – The Engineered Wood Association (apawood.org), are manufactured in accordance with the applicable standards and associated specifications indicated below:

- ANSI A190.1, *Standard for Wood Products – Structural Glued Laminated timber.*
- ICC-ES–APA Joint Evaluation Report ESR-4874
- APA Product Report PR-L294

APA is a not-for-profit trade association and is accredited by the International Accreditation Service (IAS), a subsidiary of ICC, as an independent Inspection Agency under ISO/IEC 17020. APA is also an accredited testing organization recognized by IAS under ISO/IEC 17025.

The A190.1 standard is recognized in the International Building Code (IBC) and is required for using the design provisions specified in the National Design Specification (NDS) for Wood Construction.

Green Certifications

Wood – efficient and ecological

Overview of environmental certifications:

- Green Verification Report APA GR-L294
- Low Formaldehyde Emissions Products APA PR-E740
- Environmental Product Declaration (EPD), Nordic Lam
- Health Product Declaration (HPD), Nordic Lam
- Declare (ILFI), Nordic Lam
- Home Innovation NGBS Green Certified, Certificate #00200
- USDA Certified Biobased Product, Product 92%
- Cradle to Cradle Certified, Nordic Lam
- FSC-certified products available

Note: For independently verified ICC 700 NGBS (National Green Building Standard) and LEED (Leadership in Energy and Environmental Design) points, refer to APA GR-L294.

See nordic.ca for details.

Nordic Lam+ – Transparency Brief

The Nordic Lam business-to-business environmental product declaration (EPD) is based on a cradle-to-gate life cycle analysis (LCA). The delivery of the product to the customer, its use and eventual end-of-life processing are excluded from the EPD.

Forest Operations

The assessment of the life cycle impacts of Nordic wood product begins with its origin in managed forests and the energy use and emissions caused by its extraction. Forest management and reforestation that occurs after extraction are also included.

Nordic is committed to sustainable forestry as defined in the Forest Stewardship Council (FSC) forest management certification. Nordic's wood fiber sources fall into the following category:

- Certified sources of wood fiber come from FSC certified forests.

Glulam Production

The glued-laminated timber (glulam) production phase begins with the transportation of logs to the finished product. These processes consume fossil fuel (63.0%), electricity drawn from regional grids (25.3%), internally generated biomass (10.7%) and nuclear (1.1%).

Environmental Impacts

Atmosphere		
	Global warming potential	100.38 kg CO_2 eq.
	Ozone depletion potential	1.39E-06 kg CFC-11 eq.
	Photochemical ozone creation potential	30.99 kg O_3 eq.
Water		
	Acidification potential	1.01 kg SO_2 eq.
	Eutrophication potential	0.08 kg N eq.
Earth		
	Depletion of abiotic resources (elements)	5.16 kg
	Depletion of abiotic resources (fossil fuels)	1423.32 MJ

Material Content

Component – for 1 m^3 of Nordic Lam	**Mass (kg)**	**Mass (%)**
Wood (on oven dry basis); renewable	406 kg	99.9 %
Resins (polyurethane and isocyanate)	0.43 kg	0.1 %
Total	406.43 kg	100 %

Carbon Balance

Impact Category – for 1 m^3 of Nordic Lam	**Carbon (kg of CO_2 eq.)**
Forest carbon uptake	-741.36 kg of CO_2 eq.
Life cycle greenhouse gas emissions	100.38 kg of CO_2 eq.
Unaccounted biogenic carbon emissions	26.70 kg of CO_2 eq.
Net global warming potential	-614.27 kg of CO_2 eq.

See nordic.ca for details.

NORDIC

TECHNICAL GUIDE
NORDIC LAM+

NS-GT5

ASD

VERSION
2022-02-01

STRUCTURE 2

NORDIC
STRUCTURES

Nordic Lam+ – Design Properties

Nordic Lam+ – Design Properties

Application	Beams and columns	Decking	
Axonometry	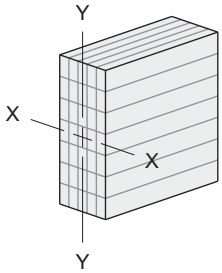	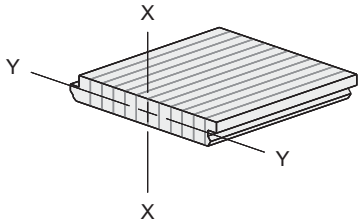	
Appearance classification	Architectural	Architectural	
Stress grade	24F-ES/NPG	ES11/NPG	20F-ES/CPG
Available thicknesses	-	1-1/2, 1-3/4 and 2-1/8 in.	3-1/2 in.
Bending about X-X axis			
Bending moment, F_{bx} [(a)]	2,400 psi	1,350 psi	2,000 psi
Shear parallel to grain, F_{vx}	300 psi	250 psi	250 psi
Compression perpendicular to grain, F_{cpx}	600 psi	450 psi	450 psi
Shear-free modulus of elasticity, E_x	1,900,000 psi	1,600,000 psi	1,900,000 psi
Apparent modulus of elasticity, $E_{x,app}$ [(b)]	1,800,000 psi	1,500,000 psi	1,800,000 psi
Bending about Y-Y axis			
Bending moment, F_{by}	2,400 psi	1,750 psi	2,000 psi
Shear parallel to grain, F_{vy}	300 psi	175 psi	250 psi
Compression perpendicular to grain, F_{cpy}	600 psi	450 psi	450 psi
Shear-free modulus of elasticity, E_y	1,900,000 psi	1,600,000 psi	1,900,000 psi
Apparent modulus of elasticity, $E_{y,app}$ [(b)]	1,800,000 psi	1,500,000 psi	1,800,000 psi
Axially loaded			
Compression parallel to grain, F_c	2,300 psi	1,550 psi	1,000 psi
Tension parallel to grain, F_t	1,600 psi	975 psi	800 psi
Modulus of elasticity, E_a	1,900,000 psi	1,600,000 psi	1,900,000 psi
Connection design			
Specific gravity, G [(c)]	0.46 -	0.41 -	0.41 -
Characteristic density, ρ_k [(d)]	27 pcf	n.a. pcf	24 pcf
Density (for member weight), ρ [(e)]	35 pcf	35 pcf	35 pcf

a) The volume factor, C_v, shall be calculated as per Clause 5.3.6 of the NDS, where the value of x is 10 and the width, b, is taken as the full member width.

b) The apparent modulus of elasticity values include a 5% shear deflection. For beam stability and column stability calculations, E_{min} shall be determined by multiplying the tabulated apparent modulus of elasticity by 0.528.

c) Specific gravity values, G, for dowel-type fastener design in accordance with the NDS.

d) Characteristic density values, ρ_k, for dowel-type fastener design in accordance with EN 1995-1-1.

e) Density values, ρ, for a moisture content of 12%.

Notes:

1. The tabulated values are for dry service conditions and normal duration of loading.
2. Nordic Lam+ members are symmetrical throughout the depth and the width of the member (homogeneous layups).
3. Design of glulam members shall be in accordance with the NDS.

Beams and Columns – Standard Dimensions

Beams and Columns – Standard Dimensions

Width (in.)												
1-1/2	3-3/8	5-3/8	7-1/4	8-1/2	9-1/2	11-1/2	13-5/8	15-1/2	17-5/8	19-3/4	21-3/4	23-3/4
Depths (in.)												
2-5/8	5-1/2	5-3/8										
3-5/8	7-1/2	7-1/2	7-1/4									
4-5/8	9-1/2	9-1/2	9-1/2	8-1/2	9-1/2							
5-5/8	11-1/2	11-1/2	11-1/2	11-1/2	11-1/2	11-1/2						
6-3/4	13-1/2	13-1/2	13-1/2	13-1/2	13-1/2	13-1/2	13-5/8					
7-3/4	15-1/2	15-1/2	15-1/2	15-1/2	15-1/2	15-1/2	15-1/2	15-1/2				
8-3/4	17-1/2	17-1/2	17-1/2	17-1/2	17-1/2	17-1/2	17-1/2	17-1/2	17-5/8			
9-3/4	19-1/2	19-1/2	19-1/2	19-1/2	19-1/2	19-1/2	19-1/2	19-1/2	19-1/2	19-3/4		
10-3/4	21-1/2	21-1/2	21-1/2	21-1/2	21-1/2	21-1/2	21-1/2	21-1/2	21-1/2	21-1/2	21-3/4	
11-3/4	23-1/2	23-1/2	23-1/2	23-1/2	23-1/2	23-1/2	23-1/2	23-1/2	23-1/2	23-1/2	23-1/2	23-3/4
12-7/8	25-1/2	25-1/2	25-1/2	25-1/2	25-1/2	25-1/2	25-1/2	25-1/2	25-1/2	25-1/2	25-1/2	25-1/2
13-7/8	27-1/2	27-1/2	27-1/2	27-1/2	27-1/2	27-1/2	27-1/2	27-1/2	27-1/2	27-1/2	27-1/2	27-1/2
14-7/8	29-1/2	29-1/2	29-1/2	29-1/2	29-1/2	29-1/2	29-1/2	29-1/2	29-1/2	29-1/2	29-1/2	29-1/2
15-7/8	31-5/8	31-5/8	31-5/8	31-5/8	31-5/8	31-5/8	31-5/8	31-5/8	31-5/8	31-5/8	31-5/8	31-5/8
16-7/8	33-5/8	33-5/8	33-5/8	33-5/8	33-5/8	33-5/8	33-5/8	33-5/8	33-5/8	33-5/8	33-5/8	33-5/8
17-7/8	35-5/8	35-5/8	35-5/8	35-5/8	35-5/8	35-5/8	35-5/8	35-5/8	35-5/8	35-5/8	35-5/8	35-5/8
	37-5/8	37-5/8	37-5/8	37-5/8	37-5/8	37-5/8	37-5/8	37-5/8	37-5/8	37-5/8	37-5/8	37-5/8
	39-5/8	39-5/8	39-5/8	39-5/8	39-5/8	39-5/8	39-5/8	39-5/8	39-5/8	39-5/8	39-5/8	39-5/8
		41-5/8	41-5/8	41-5/8	41-5/8	41-5/8	41-5/8	41-5/8	41-5/8	41-5/8	41-5/8	41-5/8
		43-5/8	43-5/8	43-5/8	43-5/8	43-5/8	43-5/8	43-5/8	43-5/8	43-5/8	43-5/8	43-5/8
		45-5/8	45-5/8	45-5/8	45-5/8	45-5/8	45-5/8	45-5/8	45-5/8	45-5/8	45-5/8	45-5/8
		47-5/8	47-5/8	47-5/8	47-5/8	47-5/8	47-5/8	47-5/8	47-5/8	47-5/8	47-5/8	47-5/8
		49-5/8	49-5/8	49-5/8	49-5/8	49-5/8	49-5/8	49-5/8	49-5/8	49-5/8	49-5/8	49-5/8
		51-5/8	51-5/8	51-5/8	51-5/8	51-5/8	51-5/8	51-5/8	51-5/8	51-5/8	51-5/8	51-5/8
		53-5/8	53-5/8	53-5/8	53-5/8	53-5/8	53-5/8	53-5/8	53-5/8	53-5/8	53-5/8	53-5/8
		55-5/8	55-5/8	55-5/8	55-5/8	55-5/8	55-5/8	55-5/8	55-5/8	55-5/8	55-5/8	55-5/8
		57-5/8	57-5/8	57-5/8	57-5/8	57-5/8	57-5/8	57-5/8	57-5/8	57-5/8	57-5/8	57-5/8
		59-5/8	59-5/8	59-5/8	59-5/8	59-5/8	59-5/8	59-5/8	59-5/8	59-5/8	59-5/8	59-5/8
		61-5/8	61-5/8	61-5/8	61-5/8	61-5/8	61-5/8	61-5/8	61-5/8	61-5/8	61-5/8	61-5/8
		63-3/4	63-3/4	63-3/4	63-3/4	63-3/4	63-3/4	63-3/4	63-3/4	63-3/4	63-3/4	63-3/4
			65-3/4	65-3/4	65-3/4	65-3/4	65-3/4	65-3/4	65-3/4	65-3/4	65-3/4	65-3/4
			67-3/4	67-3/4	67-3/4	67-3/4	67-3/4	67-3/4	67-3/4	67-3/4	67-3/4	67-3/4
			69-3/4	69-3/4	69-3/4	69-3/4	69-3/4	69-3/4	69-3/4	69-3/4	69-3/4	69-3/4
			71-3/4	71-3/4	71-3/4	71-3/4	71-3/4	71-3/4	71-3/4	71-3/4	71-3/4	71-3/4
			73-3/4	73-3/4	73-3/4	73-3/4	73-3/4	73-3/4	73-3/4	73-3/4	73-3/4	73-3/4
			75-3/4	75-3/4	75-3/4	75-3/4	75-3/4	75-3/4	75-3/4	75-3/4	75-3/4	75-3/4
			77-3/4	77-3/4	77-3/4	77-3/4	77-3/4	77-3/4	77-3/4	77-3/4	77-3/4	77-3/4
			79-3/4	79-3/4	79-3/4	79-3/4	79-3/4	79-3/4	79-3/4	79-3/4	79-3/4	79-3/4
			81-3/4	81-3/4	81-3/4	81-3/4	81-3/4	81-3/4	81-3/4	81-3/4	81-3/4	81-3/4
			83-3/4	83-3/4	83-3/4	83-3/4	83-3/4	83-3/4	83-3/4	83-3/4	83-3/4	83-3/4
			85-3/4	85-3/4	85-3/4	85-3/4	85-3/4	85-3/4	85-3/4	85-3/4	85-3/4	85-3/4
				87-3/4	87-3/4	87-3/4	87-3/4	87-3/4	87-3/4	87-3/4	87-3/4	87-3/4
				89-3/4	89-3/4	89-3/4	89-3/4	89-3/4	89-3/4	89-3/4	89-3/4	89-3/4
				91-3/4	91-3/4	91-3/4	91-3/4	91-3/4	91-3/4	91-3/4	91-3/4	91-3/4
				93-7/8	93-7/8	93-7/8	93-7/8	93-7/8	93-7/8	93-7/8	93-7/8	93-7/8
				95-7/8	95-7/8	95-7/8	95-7/8	95-7/8	95-7/8	95-7/8	95-7/8	95-7/8

Notes:

1. Members of dimensions in black are cold pressed for lengths up to 62 ft (optimum dimensions for straight members) and hot pressed for lengths between 62 and 80 ft (maximum length).
2. Members of dimensions in grey are cold pressed (maximum length of 80 ft).
3. Members of shaded dimensions are cold pressed using manual techniques (maximum length of 80 ft).
4. Depth-to-width ratio shall be limited to 12:1.
5. Other dimensions are available upon request; please contact Nordic Structures.

Beams – Design Properties

Beams – Design Properties

Depth (in.)	Width (in.) 3-3/8 M_r [a] (lbf-ft)	V_r (lbf)	E_sI (10^6 lbf-in.²)	5-3/8 M_r [a] (lbf-ft)	V_r (lbf)	E_sI (10^6 lbf-in.²)
5-1/2	3,403	3,713	84			
7-1/2	6,328	5,063	214	10,078	8,063	340
9-1/2	10,153	6,413	434	16,170	10,213	691
11-1/2	14,878	7,763	770	23,695	12,363	1,226
13-1/2	20,503	9,113	1,246	32,653	14,513	1,984
15-1/2	27,028	10,463	1,885	43,045	16,663	3,002
17-1/2	34,453	11,813	2,713	54,870	18,813	4,321
19-1/2	42,778	13,163	3,754	68,128	20,963	5,978
21-1/2	52,003	14,513	5,031	82,820	23,113	8,013
23-1/2	62,128	15,863	6,570	98,945	25,263	10,463
25-1/2	73,153	17,213	8,394	116,503	27,413	13,369
27-1/2	85,078	18,563	10,528	135,495	29,563	16,767
29-1/2	97,903	19,913	12,997	155,920	31,713	20,698
31-5/8	112,516	21,347	16,012	179,192	33,997	25,501
33-5/8	127,197	22,697	19,247	202,573	36,147	30,652
35-5/8	142,778	24,047	22,889	227,388	38,297	36,453
37-5/8	159,260	25,397	26,965	253,636	40,447	42,944
39-5/8	176,641	26,747	31,497	281,317	42,597	50,162
41-5/8				310,431	44,747	58,148
43-5/8				340,979	46,897	66,939
45-5/8				372,961	49,047	76,573
47-5/8				406,375	51,197	87,091
49-5/8				441,223	53,347	98,531
51-5/8				477,504	55,497	110,930
53-5/8				515,219	57,647	124,329
55-5/8				554,367	59,797	138,765
57-5/8				594,948	61,947	154,277
59-5/8				636,963	64,097	170,905
61-5/8				680,411	66,247	188,686
63-3/4				728,145	68,531	208,886
65-3/4						
67-3/4						
69-3/4						
71-3/4						
73-3/4						
75-3/4						
77-3/4						
79-3/4						
81-3/4						
83-3/4						
85-3/4						
87-3/4						
89-3/4						
91-3/4						
93-7/8						
95-7/8						

a) Bending moment capacity values, M_r, shall be adjusted by the lesser of volume factor or beam stability factor, C_V or C_L, respectively, as defined in Section 5 of the NDS.

Notes:

1. Final design shall include a complete analysis including the verification of the bearing capacity and fire-resistance requirements.
2. The tabulated values are based on dry service conditions, normal duration of loading, and on beams that are not notched.

Beams – Design Properties (continued)

Depth (in.)	Width (in.)					
	7-1/4			8-1/2		
	M_r [(a)] (lbf-ft)	V_r (lbf)	E_sI (10^6 lbf-in.²)	M_r [(a)] (lbf-ft)	V_r (lbf)	E_sI (10^6 lbf-in.²)
5-1/2						
7-1/2						
9-1/2	21,810	13,775	932			
11-1/2	31,960	16,675	1,654	37,471	19,550	1,939
13-1/2	44,044	19,575	2,676	51,638	22,950	3,137
15-1/2	58,060	22,475	4,050	68,071	26,350	4,748
17-1/2	74,010	25,375	5,828	86,771	29,750	6,833
19-1/2	91,894	28,275	8,064	107,738	33,150	9,454
21-1/2	111,710	31,175	10,808	130,971	36,550	12,671
23-1/2	133,460	34,075	14,113	156,471	39,950	16,547
25-1/2	157,144	36,975	18,032	184,238	43,350	21,141
27-1/2	182,760	39,875	22,617	214,271	46,750	26,516
29-1/2	210,310	42,775	27,919	246,571	50,150	32,732
31-5/8	241,701	45,856	34,397	283,373	53,763	40,328
33-5/8	273,238	48,756	41,344	320,348	57,163	48,473
35-5/8	306,709	51,656	49,169	359,590	60,563	57,647
37-5/8	342,113	54,556	57,924	401,098	63,963	67,911
39-5/8	379,451	57,456	67,661	444,873	67,363	79,326
41-5/8	418,721	60,356	78,432	490,915	70,763	91,954
43-5/8	459,926	63,256	90,289	539,223	74,163	105,856
45-5/8	503,063	66,156	103,285	589,798	77,563	121,093
47-5/8	548,134	69,056	117,472	642,640	80,963	137,726
49-5/8	595,138	71,956	132,902	697,748	84,363	155,816
51-5/8	644,076	74,856	149,627	755,123	87,763	175,425
53-5/8	694,946	77,756	167,699	814,765	91,163	196,613
55-5/8	747,751	80,656	187,171	876,673	94,563	219,442
57-5/8	802,488	83,556	208,095	940,848	97,963	243,974
59-5/8	859,159	86,456	230,523	1,007,290	101,363	270,268
61-5/8	917,763	89,356	254,507	1,075,998	104,763	298,388
63-3/4	982,148	92,438	281,754	1,151,484	108,375	330,332
65-3/4	1,044,740	95,338	309,112	1,224,868	111,775	362,408
67-3/4	1,109,265	98,238	338,187	1,300,518	115,175	396,495
69-3/4	1,175,723	101,138	369,030	1,378,434	118,575	432,656
71-3/4	1,244,115	104,038	401,694	1,458,618	121,975	470,951
73-3/4	1,314,440	106,938	436,230	1,541,068	125,375	511,442
75-3/4	1,386,698	109,838	472,691	1,625,784	128,775	554,189
77-3/4	1,460,890	112,738	511,129	1,712,768	132,175	599,255
79-3/4	1,537,015	115,638	551,596	1,802,018	135,575	646,699
81-3/4	1,615,073	118,538	594,145	1,893,534	138,975	696,584
83-3/4	1,695,065	121,438	638,828	1,987,318	142,375	748,970
85-3/4	1,776,990	124,338	685,696	2,083,368	145,775	803,920
87-3/4				2,181,684	149,175	861,493
89-3/4				2,282,268	152,575	921,751
91-3/4				2,385,118	155,975	984,755
93-7/8				2,496,879	159,588	1,054,776
95-7/8				2,604,404	162,988	1,123,638

a) Bending moment capacity values, M_r, shall be adjusted by the lesser of volume factor or beam stability factor, C_v or C_L, respectively, as defined in Section 5 of the NDS.

Notes:

1. Final design shall include a complete analysis including the verification of the bearing capacity and fire-resistance requirements.
2. The tabulated values are based on dry service conditions, normal duration of loading, and on beams that are not notched.

Beams – Design Properties (continued)

Depth (in.)	Width (in.) 9-1/2 M_r [a] (lbf-ft)	V_r (lbf)	E_sI (10^6 lbf-in.²)	11-1/2 M_r [a] (lbf-ft)	V_r (lbf)	E_sI (10^6 lbf-in.²)
5-1/2						
7-1/2						
9-1/2	28,579	18,050	1,222			
11-1/2	41,879	21,850	2,167	50,696	26,450	2,624
13-1/2	57,713	25,650	3,506	69,863	31,050	4,244
15-1/2	76,079	29,450	5,307	92,096	35,650	6,424
17-1/2	96,979	33,250	7,637	117,396	40,250	9,245
19-1/2	120,413	37,050	10,566	145,763	44,850	12,791
21-1/2	146,379	40,850	14,162	177,196	49,450	17,144
23-1/2	174,879	44,650	18,493	211,696	54,050	22,387
25-1/2	205,913	48,450	23,628	249,263	58,650	28,603
27-1/2	239,479	52,250	29,636	289,896	63,250	35,875
29-1/2	275,579	56,050	36,583	333,596	67,850	44,285
31-5/8	316,711	60,088	45,072	383,387	72,738	54,561
33-5/8	358,036	63,888	54,175	433,412	77,338	65,581
35-5/8	401,895	67,688	64,429	486,504	81,938	77,993
37-5/8	448,286	71,488	75,900	542,662	86,538	91,880
39-5/8	497,211	75,288	88,659	601,887	91,138	107,324
41-5/8	548,670	79,088	102,773	664,179	95,738	124,409
43-5/8	602,661	82,888	118,310	729,537	100,338	143,217
45-5/8	659,186	86,688	135,339	797,962	104,938	163,832
47-5/8	718,245	90,488	153,929	869,454	109,538	186,335
49-5/8	779,836	94,288	174,147	944,012	114,138	210,810
51-5/8	843,961	98,088	196,063	1,021,637	118,738	237,339
53-5/8	910,620	101,888	219,744	1,102,329	123,338	266,006
55-5/8	979,811	105,688	245,259	1,186,087	127,938	296,892
57-5/8	1,051,536	109,488	272,676	1,272,912	132,538	330,082
59-5/8	1,125,795	113,288	302,065	1,362,804	137,138	365,657
61-5/8	1,202,586	117,088	333,492	1,455,762	141,738	403,701
63-3/4	1,286,953	121,125	369,195	1,557,891	146,625	446,920
65-3/4	1,368,970	124,925	405,044	1,657,174	151,225	490,316
67-3/4	1,453,520	128,725	443,142	1,759,524	155,825	536,435
69-3/4	1,540,603	132,525	483,557	1,864,941	160,425	585,358
71-3/4	1,630,220	136,325	526,357	1,973,424	165,025	637,169
73-3/4	1,722,370	140,125	571,611	2,084,974	169,625	691,951
75-3/4	1,817,053	143,925	619,388	2,199,591	174,225	749,785
77-3/4	1,914,270	147,725	669,755	2,317,274	178,825	810,756
79-3/4	2,014,020	151,525	722,781	2,438,024	183,425	874,946
81-3/4	2,116,303	155,325	778,535	2,561,841	188,025	942,437
83-3/4	2,221,120	159,125	837,085	2,688,724	192,625	1,013,313
85-3/4	2,328,470	162,925	898,498	2,818,674	197,225	1,087,656
87-3/4	2,438,353	166,725	962,845	2,951,691	201,825	1,165,549
89-3/4	2,550,770	170,525	1,030,192	3,087,774	206,425	1,247,075
91-3/4	2,665,720	174,325	1,100,609	3,226,924	211,025	1,332,316
93-7/8	2,790,630	178,363	1,178,867	3,378,131	215,913	1,427,049
95-7/8	2,910,805	182,163	1,255,830	3,523,606	220,513	1,520,216

a) Bending moment capacity values, M_r, shall be adjusted by the lesser of volume factor or beam stability factor, C_V or C_L, respectively, as defined in Section 5 of the NDS.

Notes:

1. Final design shall include a complete analysis including the verification of the bearing capacity and fire-resistance requirements.
2. The tabulated values are based on dry service conditions, normal duration of loading, and on beams that are not notched.

Beams – Design Properties (continued)

Depth (in.)	Width (in.) 13-5/8 M_r [a] (lbf-ft)	V_r (lbf)	E_sI (10^6 lbf-in.²)	15-1/2 M_r [a] (lbf-ft)	V_r (lbf)	E_sI (10^6 lbf-in.²)
5-1/2						
7-1/2						
9-1/2						
11-1/2						
13-1/2						
15-1/2	109,114	42,238	7,611	124,129	48,050	8,658
17-1/2	139,089	47,688	10,953	158,229	54,250	12,461
19-1/2	172,697	53,138	15,154	196,463	60,450	17,240
21-1/2	209,939	58,588	20,312	238,829	66,650	23,107
23-1/2	250,814	64,038	26,524	285,329	72,850	30,174
25-1/2	295,322	69,488	33,888	335,963	79,050	38,552
27-1/2	343,464	74,938	42,504	390,729	85,250	48,353
29-1/2	395,239	80,388	52,468	449,629	91,450	59,688
31-5/8	454,231	86,178	64,643	516,739	98,038	73,538
33-5/8	513,499	91,628	77,699	584,164	104,238	88,391
35-5/8	576,401	97,078	92,404	655,723	110,438	105,121
37-5/8	642,937	102,528	108,857	731,414	116,638	123,838
39-5/8	713,106	107,978	127,156	811,239	122,838	144,654
41-5/8	786,908	113,428	147,398	895,198	129,038	167,682
43-5/8	864,343	118,878	169,681	983,289	135,238	193,032
45-5/8	945,412	124,328	194,105	1,075,514	141,438	220,817
47-5/8	1,030,114	129,778	220,766	1,171,873	147,638	251,147
49-5/8	1,118,449	135,228	249,764	1,272,364	153,838	284,135
51-5/8	1,210,418	140,678	281,195	1,376,989	160,038	319,892
53-5/8	1,306,020	146,128	315,159	1,485,748	166,238	358,529
55-5/8	1,405,256	151,578	351,753	1,598,639	172,438	400,159
57-5/8	1,508,124	157,028	391,075	1,715,664	178,638	444,893
59-5/8	1,614,626	162,478	433,224	1,836,823	184,838	492,842
61-5/8	1,724,762	167,928	478,298	1,962,114	191,038	544,119
63-3/4	1,845,762	173,719	529,503	2,099,766	197,625	602,370
65-3/4	1,963,391	179,169	580,918	2,233,582	203,825	660,861
67-3/4	2,084,653	184,619	635,559	2,371,532	210,025	723,021
69-3/4	2,209,549	190,069	693,522	2,513,616	216,225	788,961
71-3/4	2,338,078	195,519	754,907	2,659,832	222,425	858,793
73-3/4	2,470,241	200,969	819,811	2,810,182	228,625	932,629
75-3/4	2,606,037	206,419	888,333	2,964,666	234,825	1,010,580
77-3/4	2,745,466	211,869	960,570	3,123,282	241,025	1,092,758
79-3/4	2,888,528	217,319	1,036,621	3,286,032	247,225	1,179,275
81-3/4	3,035,224	222,769	1,116,583	3,452,916	253,425	1,270,241
83-3/4	3,185,553	228,219	1,200,555	3,623,932	259,625	1,365,769
85-3/4	3,339,516	233,669	1,288,636	3,799,082	265,825	1,465,971
87-3/4	3,497,112	239,119	1,380,922	3,978,366	272,025	1,570,957
89-3/4	3,658,341	244,569	1,477,512	4,161,782	278,225	1,680,840
91-3/4	3,823,203	250,019	1,578,505	4,349,332	284,425	1,795,731
93-7/8	4,002,351	255,809	1,690,743	4,553,133	291,013	1,923,414
95-7/8	4,174,707	261,259	1,801,125	4,749,208	297,213	2,048,986

a) Bending moment capacity values, M_r, shall be adjusted by the lesser of volume factor or beam stability factor, C_v or C_L, respectively, as defined in Section 5 of the NDS.

Notes:

1. Final design shall include a complete analysis including the verification of the bearing capacity and fire-resistance requirements.
2. The tabulated values are based on dry service conditions, normal duration of loading, and on beams that are not notched.

Beams – Design Properties (continued)

Depth (in.)	Width (in.) 17-5/8 M_r [a] (lbf-ft)	V_r (lbf)	E_sI (10^6 lbf-in.²)	19-3/4 M_r [a] (lbf-ft)	V_r (lbf)	E_sI (10^6 lbf-in.²)
5-1/2						
7-1/2						
9-1/2						
11-1/2						
13-1/2						
15-1/2						
17-1/2						
19-1/2	223,397	68,738	19,603			
21-1/2	271,572	75,788	26,275	304,315	84,925	29,442
23-1/2	324,447	82,838	34,310	363,565	92,825	38,447
25-1/2	382,022	89,888	43,837	428,081	100,725	49,122
27-1/2	444,297	96,938	54,982	497,865	108,625	61,611
29-1/2	511,272	103,988	67,871	572,915	116,525	76,054
31-5/8	587,583	111,478	83,620	658,426	124,919	93,702
33-5/8	664,251	118,528	100,510	744,338	132,819	112,628
35-5/8	745,620	125,578	119,532	835,518	140,719	133,944
37-5/8	831,689	132,628	140,815	931,963	148,619	157,793
39-5/8	922,458	139,678	164,486	1,033,676	156,519	184,317
41-5/8	1,017,926	146,728	190,670	1,140,655	164,419	213,659
43-5/8	1,118,095	153,778	219,496	1,252,901	172,319	245,960
45-5/8	1,222,964	160,828	251,090	1,370,413	180,219	281,363
47-5/8	1,332,533	167,878	285,578	1,493,193	188,119	320,010
49-5/8	1,446,801	174,928	323,089	1,621,238	196,019	362,043
51-5/8	1,565,770	181,978	363,748	1,754,551	203,919	407,604
53-5/8	1,689,439	189,028	407,683	1,893,130	211,819	456,836
55-5/8	1,817,808	196,078	455,020	2,036,976	219,719	509,881
57-5/8	1,950,876	203,128	505,887	2,186,088	227,619	566,880
59-5/8	2,088,645	210,178	560,410	2,340,468	235,519	627,977
61-5/8	2,231,114	217,228	618,716	2,500,113	243,419	693,313
63-3/4	2,387,637	224,719	684,953	2,675,508	251,813	767,536
65-3/4	2,539,799	231,769	751,463	2,846,016	259,713	842,065
67-3/4	2,696,662	238,819	822,145	3,021,791	267,613	921,269
69-3/4	2,858,224	245,869	897,125	3,202,833	275,513	1,005,289
71-3/4	3,024,487	252,919	976,531	3,389,141	283,413	1,094,269
73-3/4	3,195,449	259,969	1,060,490	3,580,716	291,313	1,188,350
75-3/4	3,371,112	267,019	1,149,128	3,777,558	299,213	1,287,675
77-3/4	3,551,474	274,069	1,242,572	3,979,666	307,113	1,392,386
79-3/4	3,736,537	281,119	1,340,950	4,187,041	315,013	1,502,624
81-3/4	3,926,299	288,169	1,444,387	4,399,683	322,913	1,618,533
83-3/4	4,120,762	295,219	1,553,012	4,617,591	330,813	1,740,255
85-3/4	4,319,924	302,269	1,666,951	4,840,766	338,713	1,867,931
87-3/4	4,523,787	309,319	1,786,330	5,069,208	346,613	2,001,703
89-3/4	4,732,349	316,369	1,911,278	5,302,916	354,513	2,141,715
91-3/4	4,945,612	323,419	2,041,919	5,541,891	362,413	2,288,108
93-7/8	5,177,353	330,909	2,187,108	5,801,573	370,806	2,450,802
95-7/8	5,400,309	337,959	2,329,896	6,051,410	378,706	2,610,805

a) Bending moment capacity values, M_r, shall be adjusted by the lesser of volume factor or beam stability factor, C_V or C_L, respectively, as defined in Section 5 of the NDS.

Notes:

1. Final design shall include a complete analysis including the verification of the bearing capacity and fire-resistance requirements.
2. The tabulated values are based on dry service conditions, normal duration of loading, and on beams that are not notched.

Beams – Design Properties (continued)

Depth (in.)	Width (in.)					
	21-3/4			23-3/4		
	M_r [(a)] (lbf-ft)	V_r (lbf)	E_sI (10^6 lbf-in.²)	M_r [(a)] (lbf-ft)	V_r (lbf)	E_sI (10^6 lbf-in.²)
5-1/2						
7-1/2						
9-1/2						
11-1/2						
13-1/2						
15-1/2						
17-1/2						
19-1/2						
21-1/2						
23-1/2	400,381	102,225	42,340			
25-1/2	471,431	110,925	54,097	514,781	121,125	59,071
27-1/2	548,281	119,625	67,850	598,698	130,625	74,089
29-1/2	630,931	128,325	83,756	688,948	140,125	91,458
31-5/8	725,102	137,569	103,191	791,778	150,219	112,680
33-5/8	819,714	146,269	124,033	895,090	159,719	135,438
35-5/8	920,127	154,969	147,508	1,004,736	169,219	161,072
37-5/8	1,026,339	163,669	173,772	1,120,715	178,719	189,751
39-5/8	1,138,352	172,369	202,982	1,243,028	188,219	221,647
41-5/8	1,256,164	181,069	235,295	1,371,674	197,719	256,932
43-5/8	1,379,777	189,769	270,867	1,506,653	207,219	295,775
45-5/8	1,509,189	198,469	309,855	1,647,965	216,719	338,348
47-5/8	1,644,402	207,169	352,416	1,795,611	226,219	384,822
49-5/8	1,785,414	215,869	398,705	1,949,590	235,719	435,368
51-5/8	1,932,227	224,569	448,880	2,109,903	245,219	490,157
53-5/8	2,084,839	233,269	503,098	2,276,549	254,719	549,360
55-5/8	2,243,252	241,969	561,514	2,449,528	264,219	613,147
57-5/8	2,407,464	250,669	624,286	2,628,840	273,719	681,691
59-5/8	2,577,477	259,369	691,569	2,814,486	283,219	755,162
61-5/8	2,753,289	268,069	763,522	3,006,465	292,719	833,730
63-3/4	2,946,445	277,313	845,261	3,217,383	302,813	922,987
65-3/4	3,134,220	286,013	927,337	3,422,424	312,313	1,012,610
67-3/4	3,327,795	294,713	1,014,562	3,633,799	321,813	1,107,855
69-3/4	3,527,170	303,413	1,107,091	3,851,508	331,313	1,208,892
71-3/4	3,732,345	312,113	1,205,081	4,075,549	340,813	1,315,893
73-3/4	3,943,320	320,813	1,308,689	4,305,924	350,313	1,429,029
75-3/4	4,160,095	329,513	1,418,072	4,542,633	359,813	1,548,470
77-3/4	4,382,670	338,213	1,533,387	4,785,674	369,313	1,674,388
79-3/4	4,611,045	346,913	1,654,789	5,035,049	378,813	1,806,953
81-3/4	4,845,220	355,613	1,782,435	5,290,758	388,313	1,946,338
83-3/4	5,085,195	364,313	1,916,483	5,552,799	397,813	2,092,711
85-3/4	5,330,970	373,013	2,057,088	5,821,174	407,313	2,246,246
87-3/4	5,582,545	381,713	2,204,408	6,095,883	416,813	2,407,112
89-3/4	5,839,920	390,413	2,358,598	6,376,924	426,313	2,575,480
91-3/4	6,103,095	399,113	2,519,815	6,664,299	435,813	2,751,523
93-7/8	6,389,074	408,356	2,698,984	6,976,575	445,906	2,947,167
95-7/8	6,664,211	417,056	2,875,191	7,277,012	455,406	3,139,576

a) Bending moment capacity values, M_r, shall be adjusted by the lesser of volume factor or beam stability factor, C_v or C_L, respectively, as defined in Section 5 of the NDS.

Notes:

1. Final design shall include a complete analysis including the verification of the bearing capacity and fire-resistance requirements.
2. The tabulated values are based on dry service conditions, normal duration of loading, and on beams that are not notched.

Beams – Fire Resistance

Beams – Allowable Design Load Ratio

Depth (in.)	Width (in.)							
	7-1/4				9			
	Fire-resistance rating (min)				Fire-resistance rating (min)			
	30	60	90	120	30	60	90	120
5-1/2								
7-1/2								
9-1/2	1.00	0.94	-	-				
11-1/2	1.00	1.00	-	-	1.00	1.00	0.72	-
13-1/2	1.00	1.00	-	-	1.00	1.00	0.78	-
15-1/2	1.00	1.00	-	-	1.00	1.00	0.82	-
17-1/2	1.00	1.00	-	-	1.00	1.00	0.86	-
19-1/2	1.00	1.00	-	-	1.00	1.00	0.89	-
21-1/2	1.00	1.00	-	-	1.00	1.00	0.92	-
23-1/2	1.00	1.00	-	-	1.00	1.00	0.94	-
25-1/2	1.00	1.00	-	-	1.00	1.00	0.95	-
27-1/2	1.00	1.00	-	-	1.00	1.00	0.97	-
29-1/2	1.00	1.00	-	-	1.00	1.00	0.98	-
31-5/8	1.00	1.00	-	-	1.00	1.00	0.99	-
33-5/8	1.00	1.00	-	-	1.00	1.00	1.00	-
35-5/8	1.00	1.00	-	-	1.00	1.00	1.00	-
37-5/8	1.00	1.00	-	-	1.00	1.00	1.00	-
39-5/8	1.00	1.00	-	-	1.00	1.00	1.00	-
41-5/8	1.00	1.00	-	-	1.00	1.00	1.00	-
43-5/8	1.00	1.00	-	-	1.00	1.00	1.00	-
45-5/8	1.00	1.00	-	-	1.00	1.00	1.00	-
47-5/8	1.00	1.00	-	-	1.00	1.00	1.00	-
49-5/8	1.00	1.00	-	-	1.00	1.00	1.00	-
51-5/8	1.00	1.00	-	-	1.00	1.00	1.00	-
53-5/8	1.00	1.00	-	-	1.00	1.00	1.00	-
55-5/8	1.00	1.00	-	-	1.00	1.00	1.00	-
57-5/8	1.00	1.00	-	-	1.00	1.00	1.00	-
59-5/8	1.00	1.00	-	-	1.00	1.00	1.00	-
61-5/8	1.00	1.00	-	-	1.00	1.00	1.00	-
63-3/4	1.00	1.00	-	-	1.00	1.00	1.00	-
65-3/4	1.00	1.00	-	-	1.00	1.00	1.00	-
67-3/4	1.00	1.00	-	-	1.00	1.00	1.00	-
69-3/4	1.00	1.00	-	-	1.00	1.00	1.00	-
71-3/4	1.00	1.00	-	-	1.00	1.00	1.00	-
73-3/4	1.00	1.00	-	-	1.00	1.00	1.00	-
75-3/4	1.00	1.00	-	-	1.00	1.00	1.00	-
77-3/4	1.00	1.00	-	-	1.00	1.00	1.00	-
79-3/4	1.00	1.00	-	-	1.00	1.00	1.00	-
81-3/4	1.00	1.00	-	-	1.00	1.00	1.00	-
83-3/4	1.00	1.00	-	-	1.00	1.00	1.00	-
85-3/4	1.00	1.00	-	-	1.00	1.00	1.00	-
87-3/4					1.00	1.00	1.00	-
89-3/4					1.00	1.00	1.00	-
91-3/4					1.00	1.00	1.00	-
93-7/8					1.00	1.00	1.00	-
95-7/8					1.00	1.00	1.00	-

Notes:

1. The tabulated design load ratios represent the allowable M / M_r ratio to meet fire-resistance requirements.
2. Final design shall include a complete analysis including the verification of the shear and bearing capacities and a consideration for live load and total load deflections.
3. The tabulated values are for dry service conditions, normal duration of loading, and a flexural member exposed on three sides.
4. The beam shall be laterally supported at points of bearing and along all compression edges.

Beams – Allowable Design Load Ratio (continued)

Depth (in.)	Width (in.)							
	9-1/2				11-1/2			
	Fire-resistance rating (min)				Fire-resistance rating (min)			
	30	60	90	120	30	60	90	120
5-1/2								
7-1/2								
9-1/2	1.00	1.00	0.73	0.42				
11-1/2	1.00	1.00	0.83	0.50	1.00	1.00	0.99	0.67
13-1/2	1.00	1.00	0.90	0.56	1.00	1.00	1.00	0.75
15-1/2	1.00	1.00	0.95	0.60	1.00	1.00	1.00	0.81
17-1/2	1.00	1.00	0.99	0.64	1.00	1.00	1.00	0.86
19-1/2	1.00	1.00	1.00	0.67	1.00	1.00	1.00	0.90
21-1/2	1.00	1.00	1.00	0.69	1.00	1.00	1.00	0.93
23-1/2	1.00	1.00	1.00	0.71	1.00	1.00	1.00	0.96
25-1/2	1.00	1.00	1.00	0.73	1.00	1.00	1.00	0.98
27-1/2	1.00	1.00	1.00	0.75	1.00	1.00	1.00	1.00
29-1/2	1.00	1.00	1.00	0.76	1.00	1.00	1.00	1.00
31-5/8	1.00	1.00	1.00	0.77	1.00	1.00	1.00	1.00
33-5/8	1.00	1.00	1.00	0.78	1.00	1.00	1.00	1.00
35-5/8	1.00	1.00	1.00	0.79	1.00	1.00	1.00	1.00
37-5/8	1.00	1.00	1.00	0.80	1.00	1.00	1.00	1.00
39-5/8	1.00	1.00	1.00	0.81	1.00	1.00	1.00	1.00
41-5/8	1.00	1.00	1.00	0.81	1.00	1.00	1.00	1.00
43-5/8	1.00	1.00	1.00	0.82	1.00	1.00	1.00	1.00
45-5/8	1.00	1.00	1.00	0.83	1.00	1.00	1.00	1.00
47-5/8	1.00	1.00	1.00	0.83	1.00	1.00	1.00	1.00
49-5/8	1.00	1.00	1.00	0.84	1.00	1.00	1.00	1.00
51-5/8	1.00	1.00	1.00	0.84	1.00	1.00	1.00	1.00
53-5/8	1.00	1.00	1.00	0.84	1.00	1.00	1.00	1.00
55-5/8	1.00	1.00	1.00	0.85	1.00	1.00	1.00	1.00
57-5/8	1.00	1.00	1.00	0.85	1.00	1.00	1.00	1.00
59-5/8	1.00	1.00	1.00	0.85	1.00	1.00	1.00	1.00
61-5/8	1.00	1.00	1.00	0.86	1.00	1.00	1.00	1.00
63-3/4	1.00	1.00	1.00	0.86	1.00	1.00	1.00	1.00
65-3/4	1.00	1.00	1.00	0.86	1.00	1.00	1.00	1.00
67-3/4	1.00	1.00	1.00	0.87	1.00	1.00	1.00	1.00
69-3/4	1.00	1.00	1.00	0.87	1.00	1.00	1.00	1.00
71-3/4	1.00	1.00	1.00	0.87	1.00	1.00	1.00	1.00
73-3/4	1.00	1.00	1.00	0.87	1.00	1.00	1.00	1.00
75-3/4	1.00	1.00	1.00	0.88	1.00	1.00	1.00	1.00
77-3/4	1.00	1.00	1.00	0.88	1.00	1.00	1.00	1.00
79-3/4	1.00	1.00	1.00	0.88	1.00	1.00	1.00	1.00
81-3/4	1.00	1.00	1.00	0.88	1.00	1.00	1.00	1.00
83-3/4	1.00	1.00	1.00	0.88	1.00	1.00	1.00	1.00
85-3/4	1.00	1.00	1.00	0.88	1.00	1.00	1.00	1.00
87-3/4	1.00	1.00	1.00	0.89	1.00	1.00	1.00	1.00
89-3/4	1.00	1.00	1.00	0.89	1.00	1.00	1.00	1.00
91-3/4	1.00	1.00	1.00	0.89	1.00	1.00	1.00	1.00
93-7/8	1.00	1.00	1.00	0.89	1.00	1.00	1.00	1.00
95-7/8	1.00	1.00	1.00	0.89	1.00	1.00	1.00	1.00

Notes:

1. The tabulated design load ratios represent the allowable M / M_r ratio to meet fire-resistance requirements.
2. Final design shall include a complete analysis including the verification of the shear and bearing capacities and a consideration for live load and total load deflections.
3. The tabulated values are for dry service conditions, normal duration of loading, and a flexural member exposed on three sides.
4. The beam shall be laterally supported at points of bearing and along all compression edges.

Beams – Allowable Design Load Ratio (continued)

Depth (in.)	Width (in.)							
	13-5/8				15-1/2			
	Fire-resistance rating (min)				Fire-resistance rating (min)			
	30	60	90	120	30	60	90	120
5-1/2								
7-1/2								
9-1/2								
11-1/2								
13-1/2								
15-1/2	1.00	1.00	1.00	0.97	1.00	1.00	1.00	1.00
17-1/2	1.00	1.00	1.00	1.00	1.00	1.00	1.00	1.00
19-1/2	1.00	1.00	1.00	1.00	1.00	1.00	1.00	1.00
21-1/2	1.00	1.00	1.00	1.00	1.00	1.00	1.00	1.00
23-1/2	1.00	1.00	1.00	1.00	1.00	1.00	1.00	1.00
25-1/2	1.00	1.00	1.00	1.00	1.00	1.00	1.00	1.00
27-1/2	1.00	1.00	1.00	1.00	1.00	1.00	1.00	1.00
29-1/2	1.00	1.00	1.00	1.00	1.00	1.00	1.00	1.00
31-5/8	1.00	1.00	1.00	1.00	1.00	1.00	1.00	1.00
33-5/8	1.00	1.00	1.00	1.00	1.00	1.00	1.00	1.00
35-5/8	1.00	1.00	1.00	1.00	1.00	1.00	1.00	1.00
37-5/8	1.00	1.00	1.00	1.00	1.00	1.00	1.00	1.00
39-5/8	1.00	1.00	1.00	1.00	1.00	1.00	1.00	1.00
41-5/8	1.00	1.00	1.00	1.00	1.00	1.00	1.00	1.00
43-5/8	1.00	1.00	1.00	1.00	1.00	1.00	1.00	1.00
45-5/8	1.00	1.00	1.00	1.00	1.00	1.00	1.00	1.00
47-5/8	1.00	1.00	1.00	1.00	1.00	1.00	1.00	1.00
49-5/8	1.00	1.00	1.00	1.00	1.00	1.00	1.00	1.00
51-5/8	1.00	1.00	1.00	1.00	1.00	1.00	1.00	1.00
53-5/8	1.00	1.00	1.00	1.00	1.00	1.00	1.00	1.00
55-5/8	1.00	1.00	1.00	1.00	1.00	1.00	1.00	1.00
57-5/8	1.00	1.00	1.00	1.00	1.00	1.00	1.00	1.00
59-5/8	1.00	1.00	1.00	1.00	1.00	1.00	1.00	1.00
61-5/8	1.00	1.00	1.00	1.00	1.00	1.00	1.00	1.00
63-3/4	1.00	1.00	1.00	1.00	1.00	1.00	1.00	1.00
65-3/4	1.00	1.00	1.00	1.00	1.00	1.00	1.00	1.00
67-3/4	1.00	1.00	1.00	1.00	1.00	1.00	1.00	1.00
69-3/4	1.00	1.00	1.00	1.00	1.00	1.00	1.00	1.00
71-3/4	1.00	1.00	1.00	1.00	1.00	1.00	1.00	1.00
73-3/4	1.00	1.00	1.00	1.00	1.00	1.00	1.00	1.00
75-3/4	1.00	1.00	1.00	1.00	1.00	1.00	1.00	1.00
77-3/4	1.00	1.00	1.00	1.00	1.00	1.00	1.00	1.00
79-3/4	1.00	1.00	1.00	1.00	1.00	1.00	1.00	1.00
81-3/4	1.00	1.00	1.00	1.00	1.00	1.00	1.00	1.00
83-3/4	1.00	1.00	1.00	1.00	1.00	1.00	1.00	1.00
85-3/4	1.00	1.00	1.00	1.00	1.00	1.00	1.00	1.00
87-3/4	1.00	1.00	1.00	1.00	1.00	1.00	1.00	1.00
89-3/4	1.00	1.00	1.00	1.00	1.00	1.00	1.00	1.00
91-3/4	1.00	1.00	1.00	1.00	1.00	1.00	1.00	1.00
93-7/8	1.00	1.00	1.00	1.00	1.00	1.00	1.00	1.00
95-7/8	1.00	1.00	1.00	1.00	1.00	1.00	1.00	1.00

Notes:

1. The tabulated design load ratios represent the allowable M / M_r ratio to meet fire-resistance requirements.
2. Final design shall include a complete analysis including the verification of the shear and bearing capacities and a consideration for live load and total load deflections.
3. The tabulated values are for dry service conditions, normal duration of loading, and a flexural member exposed on three sides.
4. The beam shall be laterally supported at points of bearing and along all compression edges.

Beams – Allowable Design Load Ratio (continued)

Depth (in.)	Width (in.)							
	17-5/8				19-3/4			
	Fire-resistance rating (min)				Fire-resistance rating (min)			
	30	60	90	120	30	60	90	120
5-1/2								
7-1/2								
9-1/2								
11-1/2								
13-1/2								
15-1/2								
17-1/2								
19-1/2	1.00	1.00	1.00	1.00				
21-1/2	1.00	1.00	1.00	1.00	1.00	1.00	1.00	1.00
23-1/2	1.00	1.00	1.00	1.00	1.00	1.00	1.00	1.00
25-1/2	1.00	1.00	1.00	1.00	1.00	1.00	1.00	1.00
27-1/2	1.00	1.00	1.00	1.00	1.00	1.00	1.00	1.00
29-1/2	1.00	1.00	1.00	1.00	1.00	1.00	1.00	1.00
31-5/8	1.00	1.00	1.00	1.00	1.00	1.00	1.00	1.00
33-5/8	1.00	1.00	1.00	1.00	1.00	1.00	1.00	1.00
35-5/8	1.00	1.00	1.00	1.00	1.00	1.00	1.00	1.00
37-5/8	1.00	1.00	1.00	1.00	1.00	1.00	1.00	1.00
39-5/8	1.00	1.00	1.00	1.00	1.00	1.00	1.00	1.00
41-5/8	1.00	1.00	1.00	1.00	1.00	1.00	1.00	1.00
43-5/8	1.00	1.00	1.00	1.00	1.00	1.00	1.00	1.00
45-5/8	1.00	1.00	1.00	1.00	1.00	1.00	1.00	1.00
47-5/8	1.00	1.00	1.00	1.00	1.00	1.00	1.00	1.00
49-5/8	1.00	1.00	1.00	1.00	1.00	1.00	1.00	1.00
51-5/8	1.00	1.00	1.00	1.00	1.00	1.00	1.00	1.00
53-5/8	1.00	1.00	1.00	1.00	1.00	1.00	1.00	1.00
55-5/8	1.00	1.00	1.00	1.00	1.00	1.00	1.00	1.00
57-5/8	1.00	1.00	1.00	1.00	1.00	1.00	1.00	1.00
59-5/8	1.00	1.00	1.00	1.00	1.00	1.00	1.00	1.00
61-5/8	1.00	1.00	1.00	1.00	1.00	1.00	1.00	1.00
63-3/4	1.00	1.00	1.00	1.00	1.00	1.00	1.00	1.00
65-3/4	1.00	1.00	1.00	1.00	1.00	1.00	1.00	1.00
67-3/4	1.00	1.00	1.00	1.00	1.00	1.00	1.00	1.00
69-3/4	1.00	1.00	1.00	1.00	1.00	1.00	1.00	1.00
71-3/4	1.00	1.00	1.00	1.00	1.00	1.00	1.00	1.00
73-3/4	1.00	1.00	1.00	1.00	1.00	1.00	1.00	1.00
75-3/4	1.00	1.00	1.00	1.00	1.00	1.00	1.00	1.00
77-3/4	1.00	1.00	1.00	1.00	1.00	1.00	1.00	1.00
79-3/4	1.00	1.00	1.00	1.00	1.00	1.00	1.00	1.00
81-3/4	1.00	1.00	1.00	1.00	1.00	1.00	1.00	1.00
83-3/4	1.00	1.00	1.00	1.00	1.00	1.00	1.00	1.00
85-3/4	1.00	1.00	1.00	1.00	1.00	1.00	1.00	1.00
87-3/4	1.00	1.00	1.00	1.00	1.00	1.00	1.00	1.00
89-3/4	1.00	1.00	1.00	1.00	1.00	1.00	1.00	1.00
91-3/4	1.00	1.00	1.00	1.00	1.00	1.00	1.00	1.00
93-7/8	1.00	1.00	1.00	1.00	1.00	1.00	1.00	1.00
95-7/8	1.00	1.00	1.00	1.00	1.00	1.00	1.00	1.00

Notes:

1. The tabulated design load ratios represent the allowable M / M_r ratio to meet fire-resistance requirements.
2. Final design shall include a complete analysis including the verification of the shear and bearing capacities and a consideration for live load and total load deflections.
3. The tabulated values are for dry service conditions, normal duration of loading, and a flexural member exposed on three sides.
4. The beam shall be laterally supported at points of bearing and along all compression edges.

Columns – Selection Tables

Columns – Allowable Compressive Capacities

Column width – 5-3/8 in.

L (ft)	Depth (in.)							
	5-3/8		7-1/2		9-1/2		11-1/2	
	P_{rx} (lbf)	P_{ry} (lbf)	P_{rx} (lbf)	P_{ry} (lbf)	P_{rx} (lbf)	P_{ry} (lbf)	P_{rx} (lbf)	P_{ry} (lbf)
6	60,800	60,800	89,550	84,800	115,150	107,450	140,350	130,050
7	57,200	57,200	88,000	79,800	114,150	101,100	139,650	122,350
8	52,050	52,050	85,800	72,600	112,850	92,000	138,700	111,350
9	45,800	45,800	82,800	63,950	111,200	80,950	137,550	98,000
10	39,550	39,550	78,750	55,150	109,050	69,900	136,150	84,600
11	33,950	33,950	73,550	47,350	106,250	60,000	134,400	72,600
12	29,200	29,200	67,500	40,750	102,650	51,600	132,250	62,500
13	25,300	25,300	61,100	35,300	98,150	44,700	129,550	54,100
14	22,050	22,050	54,900	30,750	92,800	38,950	126,300	47,150
15	19,350	19,350	49,200	27,000	86,750	34,200	122,250	41,400
16	17,100	17,100	44,100	23,900	80,400	30,250	117,500	36,650
17	15,250	15,250	39,650	21,250	74,000	26,950	112,050	32,600
18	13,650	13,650	35,800	19,050	67,950	24,100	106,000	29,200
19	12,300	12,300	32,400	17,150	62,300	21,700	99,650	26,300
20	11,100	11,100	29,450	15,500	57,150	19,650	93,250	23,800
21	10,100	10,100	26,850	14,100	52,550	17,850	87,000	21,600
22	9,200	9,200	24,550	12,850	48,350	16,300	81,050	19,750
23			22,550		44,600		75,450	
24			20,800		41,250		70,250	
25			19,200		38,200		65,450	
26			17,800		35,500		61,100	
27			16,550		33,050		57,100	
28			15,400		30,850		53,450	
29			14,400		28,850		50,100	
30			13,450		27,000		47,050	

Notes:

1. Final design shall include a complete analysis including the verification of the bearing capacity and fire-resistance requirements.
2. The tabulated values are based on dry service conditions, normal duration of loading, and on simply axially loaded columns subjected to concentric end loads (no eccentricity). P_{rx} and P_{ry} are the compressive capacity parallel to grain about the X-X (strong) axis and the Y-Y (weak) axis, respectively.
3. For L ≤ 6 ft, use P_r for L = 6 ft.
4. L = unsupported length.

Columns – Allowable Compressive Capacities (continued)

Column width – 7-1/4 in.

L (ft)	Depth (in.)							
	7-1/4		9-1/2		11-1/2		13-1/2	
	P_{rx} (lbf)	P_{ry} (lbf)	P_{rx} (lbf)	P_{ry} (lbf)	P_{rx} (lbf)	P_{ry} (lbf)	P_{rx} (lbf)	P_{ry} (lbf)
6	116,400	116,400	155,350	152,500	189,350	184,600	223,100	216,700
7	114,100	114,100	154,000	149,550	188,350	181,000	222,300	212,500
8	110,950	110,950	152,250	145,350	187,100	175,950	221,300	206,550
9	106,500	106,500	150,000	139,550	185,550	168,950	220,150	198,300
10	100,500	100,500	147,050	131,700	183,650	159,450	218,750	187,150
11	93,000	93,000	143,300	121,900	181,300	147,550	217,050	173,200
12	84,550	84,550	138,450	110,800	178,350	134,150	215,000	157,450
13	75,950	75,950	132,400	99,550	174,750	120,500	212,600	141,450
14	67,900	67,900	125,150	88,950	170,350	107,700	209,700	126,400
15	60,600	60,600	117,000	79,450	164,900	96,150	206,200	112,900
16	54,250	54,250	108,400	71,050	158,500	86,000	202,000	100,950
17	48,650	48,650	99,850	63,750	151,100	77,200	197,050	90,600
18	43,850	43,850	91,650	57,450	143,000	69,550	191,200	81,650
19	39,650	39,650	84,050	51,950	134,450	62,900	184,550	73,850
20	36,000	36,000	77,100	47,150	125,800	57,100	177,050	67,050
21	32,800	32,800	70,850	43,000	117,350	52,050	168,950	61,100
22	30,000	30,000	65,200	39,350	109,300	47,600	160,450	55,900
23	27,550	27,550	60,150	36,100	101,750	43,700	151,800	51,300
24	25,400	25,400	55,600	33,250	94,750	40,250	143,200	47,250
25	23,450	23,450	51,550	30,750	88,300	37,200	134,900	43,650
26	21,750	21,750	47,900	28,450	82,400	34,450	126,950	40,450
27	20,200	20,200	44,600	26,450	77,000	32,000	119,450	37,600
28	18,800	18,800	41,600	24,650	72,050	29,800	112,400	35,000
29	17,550	17,550	38,900	23,000	67,550	27,850	105,850	32,700
30	16,400	16,400	36,450	21,500	63,450	26,050	99,750	30,600

Notes:

1. Final design shall include a complete analysis including the verification of the bearing capacity and fire-resistance requirements.
2. The tabulated values are based on dry service conditions, normal duration of loading, and on simply axially loaded columns subjected to concentric end loads (no eccentricity). P_{rx} and P_{ry} are the compressive capacity parallel to grain about the X-X (strong) axis and the Y-Y (weak) axis, respectively.
3. For L ≤ 6 ft, use P_r for L = 6 ft.
4. L = unsupported length.

Columns – Allowable Compressive Capacities (continued)

Column width – 8-1/2 in.

L (ft)	Depth (in.)							
	8-1/2		11-1/2		13-1/2		15-1/2	
	P_{rx} (lbf)	P_{ry} (lbf)	P_{rx} (lbf)	P_{ry} (lbf)	P_{rx} (lbf)	P_{ry} (lbf)	P_{rx} (lbf)	P_{ry} (lbf)
6	162,000	162,000	222,000	219,150	261,550	257,250	301,000	295,400
7	160,050	160,050	220,800	216,550	260,600	254,200	300,200	291,850
8	157,500	157,500	219,350	213,100	259,500	250,150	299,250	287,200
9	154,050	154,050	217,550	208,450	258,100	244,700	298,150	280,950
10	149,500	149,500	215,300	202,250	256,450	237,450	296,850	272,650
11	143,500	143,500	212,550	194,150	254,450	227,950	295,300	261,700
12	135,900	135,900	209,150	183,900	252,100	215,850	293,450	247,850
13	126,850	126,850	204,900	171,650	249,250	201,500	291,350	231,350
14	116,950	116,950	199,700	158,200	245,850	185,700	288,850	213,250
15	106,800	106,800	193,350	144,550	241,750	169,650	285,950	194,800
16	97,150	97,150	185,800	131,400	236,850	154,250	282,500	177,100
17	88,150	88,150	177,150	119,300	231,000	140,050	278,500	160,800
18	80,100	80,100	167,650	108,350	224,200	127,200	273,850	146,050
19	72,850	72,850	157,600	98,600	216,350	115,750	268,400	132,900
20	66,450	66,450	147,500	89,950	207,600	105,550	262,100	121,200
21	60,800	60,800	137,600	82,250	198,050	96,550	254,900	110,900
22	55,800	55,800	128,150	75,450	188,100	88,600	246,850	101,700
23	51,300	51,300	119,300	69,450	177,950	81,500	238,000	93,600
24	47,350	47,350	111,100	64,050	167,900	75,200	228,500	86,350
25	43,800	43,800	103,550	59,250	158,150	69,600	218,600	79,900
26	40,650	40,650	96,600	55,000	148,850	64,550	208,450	74,100
27	37,800	37,800	90,300	51,150	140,050	60,000	198,350	68,900
28	35,250	35,250	84,500	47,650	131,800	55,950	188,400	64,250
29	32,900	32,900	79,200	44,550	124,100	52,250	178,750	60,000
30	30,800	30,800	74,350	41,700	116,950	48,950	169,550	56,200

Notes:

1. Final design shall include a complete analysis including the verification of the bearing capacity and fire-resistance requirements.
2. The tabulated values are based on dry service conditions, normal duration of loading, and on simply axially loaded columns subjected to concentric end loads (no eccentricity). P_{rx} and P_{ry} are the compressive capacity parallel to grain about the X-X (strong) axis and the Y-Y (weak) axis, respectively.
3. For L ≤ 6 ft, use P_r for L = 6 ft.
4. L = unsupported length.

Columns – Allowable Compressive Capacities (continued)

Column width – 9-1/2 in.

L (ft)	Depth (in.)							
	9-1/2		11-1/2		13-1/2		15-1/2	
	P_{rx} (lbf)	P_{ry} (lbf)	P_{rx} (lbf)	P_{ry} (lbf)	P_{rx} (lbf)	P_{ry} (lbf)	P_{rx} (lbf)	P_{ry} (lbf)
6	203,550	203,550	248,100	246,400	292,350	289,250	336,400	332,100
7	201,750	201,750	246,800	244,250	291,300	286,750	335,550	329,200
8	199,500	199,500	245,150	241,500	290,000	283,500	334,500	325,500
9	196,550	196,550	243,150	237,900	288,450	279,300	333,250	320,650
10	192,700	192,700	240,650	233,300	286,600	273,850	331,750	314,400
11	187,750	187,750	237,550	227,300	284,400	266,800	330,000	306,350
12	181,450	181,450	233,750	219,600	281,750	257,800	328,000	296,000
13	173,500	173,500	229,000	210,050	278,550	246,550	325,600	283,100
14	164,000	164,000	223,200	198,550	274,750	233,100	322,850	267,600
15	153,350	153,350	216,100	185,600	270,150	217,900	319,550	250,200
16	142,050	142,050	207,700	171,950	264,700	201,900	315,750	231,800
17	130,850	130,850	198,000	158,350	258,200	185,900	311,300	213,450
18	120,100	120,100	187,350	145,400	250,550	170,650	306,050	195,950
19	110,150	110,150	176,150	133,300	241,800	156,500	299,950	179,700
20	101,050	101,050	164,850	122,300	232,000	143,600	292,950	164,850
21	92,850	92,850	153,750	112,400	221,400	131,950	284,900	151,450
22	85,450	85,450	143,200	103,450	210,250	121,450	275,900	139,400
23	78,850	78,850	133,300	95,400	198,900	112,000	266,000	128,600
24	72,900	72,900	124,150	88,250	187,650	103,550	255,400	118,900
25	67,550	67,550	115,700	81,750	176,750	96,000	244,300	110,200
26	62,750	62,750	108,000	75,950	166,350	89,150	233,000	102,350
27	58,400	58,400	100,900	70,700	156,500	83,000	221,650	95,300
28	54,500	54,500	94,450	66,000	147,300	77,450	210,550	88,950
29	50,950	50,950	88,550	61,700	138,700	72,400	199,800	83,150
30	47,750	47,750	83,100	57,800	130,700	67,850	189,500	77,900

Notes:

1. Final design shall include a complete analysis including the verification of the bearing capacity and fire-resistance requirements.
2. The tabulated values are based on dry service conditions, normal duration of loading, and on simply axially loaded columns subjected to concentric end loads (no eccentricity). P_{rx} and P_{ry} are the compressive capacity parallel to grain about the X-X (strong) axis and the Y-Y (weak) axis, respectively.
3. For L ≤ 6 ft, use P_r for L = 6 ft.
4. L = unsupported length.

Columns – Allowable Compressive Capacities (continued)

Column width – 11-1/2 in.

L (ft)	Depth (in.)							
	11-1/2		13-1/2		15-1/2		17-1/2	
	P_{rx} (lbf)	P_{ry} (lbf)	P_{rx} (lbf)	P_{ry} (lbf)	P_{rx} (lbf)	P_{ry} (lbf)	P_{rx} (lbf)	P_{ry} (lbf)
6	300,300	300,300	353,900	352,550	407,250	404,800	460,500	457,000
7	298,750	298,750	352,600	350,700	406,200	402,650	459,550	454,600
8	296,750	296,750	351,050	348,350	404,900	400,000	458,450	451,600
9	294,300	294,300	349,200	345,500	403,400	396,700	457,200	447,900
10	291,300	291,300	346,950	341,950	401,600	392,600	455,700	443,300
11	287,550	287,550	344,300	337,550	399,500	387,600	453,950	437,600
12	282,950	282,950	341,050	332,150	397,050	381,350	451,950	430,550
13	277,200	277,200	337,200	325,450	394,150	373,650	449,650	421,850
14	270,150	270,150	332,600	317,150	390,800	364,150	447,050	411,150
15	261,600	261,600	327,050	307,100	386,850	352,600	444,000	398,100
16	251,400	251,400	320,400	295,150	382,250	338,850	440,500	382,600
17	239,700	239,700	312,550	281,400	376,800	323,050	436,500	364,750
18	226,800	226,800	303,300	266,250	370,500	305,700	431,850	345,150
19	213,250	213,250	292,700	250,300	363,100	287,400	426,550	324,500
20	199,550	199,550	280,850	234,250	354,600	268,950	420,450	303,650
21	186,150	186,150	268,000	218,500	344,900	250,850	413,450	283,250
22	173,350	173,350	254,500	203,500	333,950	233,650	405,450	263,800
23	161,400	161,400	240,750	189,450	322,000	217,550	396,450	245,600
24	150,300	150,300	227,150	176,450	309,150	202,550	386,350	228,700
25	140,100	140,100	213,950	164,450	295,750	188,800	375,200	213,150
26	130,700	130,700	201,350	153,450	282,050	176,200	363,150	198,900
27	122,150	122,150	189,450	143,400	268,350	164,650	350,300	185,900
28	114,300	114,300	178,300	134,200	254,900	154,100	336,950	173,950
29	107,150	107,150	167,900	125,800	241,850	144,450	323,300	163,100
30	100,600	100,600	158,200	118,100	229,400	135,600	309,550	153,100

Notes:

1. Final design shall include a complete analysis including the verification of the bearing capacity and fire-resistance requirements.
2. The tabulated values are based on dry service conditions, normal duration of loading, and on simply axially loaded columns subjected to concentric end loads (no eccentricity). P_{rx} and P_{ry} are the compressive capacity parallel to grain about the X-X (strong) axis and the Y-Y (weak) axis, respectively.
3. For L ≤ 6 ft, use P_r for L = 6 ft.
4. L = unsupported length.

Columns – Allowable Compressive Capacities (continued)

Column width – 13-5/8 in.

L (ft)	Depth (in.)							
	13-5/8		15-1/2		17-1/2		19-1/2	
	P_{rx} (lbf)	P_{ry} (lbf)	P_{rx} (lbf)	P_{ry} (lbf)	P_{rx} (lbf)	P_{ry} (lbf)	P_{rx} (lbf)	P_{ry} (lbf)
6	423,200	423,200	482,500	481,450	545,550	543,600	608,550	605,700
7	421,750	421,750	481,250	479,800	544,500	541,700	607,600	603,600
8	419,950	419,950	479,700	477,700	543,200	539,350	606,450	601,000
9	417,750	417,750	477,900	475,250	541,650	536,550	605,150	597,900
10	415,150	415,150	475,800	472,300	539,900	533,200	603,600	594,150
11	412,000	412,000	473,300	468,700	537,850	529,200	601,850	589,700
12	408,300	408,300	470,400	464,450	535,500	524,400	599,900	584,350
13	403,800	403,800	467,000	459,400	532,750	518,650	597,600	577,950
14	398,450	398,450	463,000	453,300	529,650	511,800	595,050	570,250
15	392,050	392,050	458,350	446,000	526,050	503,550	592,100	561,100
16	384,400	384,400	452,850	437,300	521,900	493,700	588,800	550,150
17	375,300	375,300	446,450	426,950	517,150	482,050	585,050	537,150
18	364,650	364,650	438,950	414,800	511,700	468,350	580,800	521,850
19	352,350	352,350	430,200	400,850	505,400	452,550	575,950	504,250
20	338,550	338,550	420,150	385,100	498,150	434,800	570,500	484,500
21	323,500	323,500	408,600	368,000	489,850	415,500	564,300	462,950
22	307,600	307,600	395,700	349,950	480,400	395,100	557,250	440,250
23	291,350	291,350	381,500	331,450	469,700	374,200	549,300	417,000
24	275,200	275,200	366,300	313,050	457,750	353,450	540,350	393,850
25	259,400	259,400	350,350	295,100	444,550	333,200	530,250	371,300
26	244,300	244,300	334,150	277,950	430,250	313,800	519,100	349,650
27	230,000	230,000	317,900	261,650	415,050	295,400	506,750	329,150
28	216,550	216,550	302,000	246,350	399,200	278,150	493,350	309,900
29	204,000	204,000	286,550	232,050	383,050	262,000	479,000	291,950
30	192,300	192,300	271,800	218,750	366,750	247,000	463,800	275,200

Notes:

1. Final design shall include a complete analysis including the verification of the bearing capacity and fire-resistance requirements.
2. The tabulated values are based on dry service conditions, normal duration of loading, and on simply axially loaded columns subjected to concentric end loads (no eccentricity). P_{rx} and P_{ry} are the compressive capacity parallel to grain about the X-X (strong) axis and the Y-Y (weak) axis, respectively.
3. For L ≤ 6 ft, use P_r for L = 6 ft.
4. L = unsupported length.

Columns – Allowable Compressive Capacities (continued)

Column width – 15-1/2 in.

L (ft)	Depth (in.)							
	15-1/2		17-1/2		19-1/2		21-1/2	
	P_{rx} (lbf)	P_{ry} (lbf)	P_{rx} (lbf)	P_{ry} (lbf)	P_{rx} (lbf)	P_{ry} (lbf)	P_{rx} (lbf)	P_{ry} (lbf)
6	548,900	548,900	620,650	619,700	692,300	690,550	763,900	761,350
7	547,450	547,450	619,400	618,100	691,200	688,750	762,900	759,350
8	545,750	545,750	617,950	616,150	689,950	686,550	761,750	757,000
9	543,700	543,700	616,200	613,850	688,400	684,000	760,450	754,150
10	541,300	541,300	614,200	611,150	686,700	680,950	758,900	750,800
11	538,450	538,450	611,850	607,950	684,700	677,400	757,150	746,900
12	535,150	535,150	609,200	604,200	682,450	673,250	755,200	742,300
13	531,250	531,250	606,100	599,800	679,850	668,350	752,950	736,900
14	526,750	526,750	602,500	594,700	676,900	662,650	750,450	730,600
15	521,400	521,400	598,450	588,700	673,600	655,950	747,650	723,250
16	515,200	515,200	593,750	581,650	669,800	648,150	744,500	714,600
17	507,900	507,900	588,300	573,400	665,550	638,950	741,000	704,500
18	499,350	499,350	582,100	563,800	660,700	628,200	737,050	692,650
19	489,400	489,400	574,950	552,550	655,200	615,700	732,650	678,900
20	477,950	477,950	566,700	539,600	649,000	601,300	727,650	662,950
21	464,850	464,850	557,250	524,800	641,950	584,800	722,100	644,800
22	450,150	450,150	546,500	508,200	633,950	566,300	715,900	624,400
23	434,000	434,000	534,350	490,000	624,900	546,000	708,900	602,000
24	416,700	416,700	520,700	470,450	614,700	524,200	701,100	578,000
25	398,600	398,600	505,700	450,000	603,250	501,450	692,350	552,900
26	380,100	380,100	489,450	429,150	590,500	478,200	682,600	527,250
27	361,650	361,650	472,150	408,350	576,500	455,000	671,750	501,650
28	343,550	343,550	454,150	387,850	561,250	432,200	659,750	476,550
29	326,000	326,000	435,750	368,050	544,900	410,100	646,550	452,200
30	309,200	309,200	417,250	349,050	527,650	388,950	632,200	428,850

Notes:

1. Final design shall include a complete analysis including the verification of the bearing capacity and fire-resistance requirements.
2. The tabulated values are based on dry service conditions, normal duration of loading, and on simply axially loaded columns subjected to concentric end loads (no eccentricity). P_{rx} and P_{ry} are the compressive capacity parallel to grain about the X-X (strong) axis and the Y-Y (weak) axis, respectively.
3. For L ≤ 6 ft, use P_r for L = 6 ft.
4. L = unsupported length.

Columns – Allowable Compressive Capacities (continued)

Column width – 17-5/8 in.

L (ft)	Depth (in.)							
	17-5/8		19-1/2		21-1/2		23-1/2	
	P_{rx} (lbf)	P_{ry} (lbf)	P_{rx} (lbf)	P_{ry} (lbf)	P_{rx} (lbf)	P_{ry} (lbf)	P_{rx} (lbf)	P_{ry} (lbf)
6	710,850	710,850	787,200	786,450	868,600	867,100	949,950	947,750
7	709,450	709,450	785,950	784,900	867,500	865,400	948,950	945,900
8	707,800	707,800	784,500	783,100	866,200	863,400	947,750	943,700
9	705,850	705,850	782,800	780,900	864,700	861,000	946,400	941,100
10	703,550	703,550	780,850	778,400	862,950	858,250	944,850	938,100
11	700,950	700,950	778,550	775,500	860,950	855,050	943,100	934,600
12	697,900	697,900	776,000	772,150	858,750	851,350	941,100	930,550
13	694,450	694,450	773,050	768,300	856,200	847,100	938,900	925,950
14	690,450	690,450	769,700	763,900	853,350	842,250	936,400	920,600
15	685,850	685,850	765,950	758,850	850,150	836,650	933,650	914,500
16	680,600	680,600	761,650	753,000	846,600	830,250	930,550	907,450
17	674,550	674,550	756,800	746,300	842,600	822,850	927,150	899,400
18	667,600	667,600	751,300	738,600	838,100	814,350	923,350	890,100
19	659,600	659,600	745,050	729,750	833,050	804,600	919,150	879,450
20	650,400	650,400	737,950	719,600	827,450	793,400	914,500	867,200
21	639,900	639,900	729,950	707,950	821,100	780,550	909,300	853,200
22	627,900	627,900	720,850	694,700	814,050	765,950	903,550	837,200
23	614,300	614,300	710,550	679,650	806,100	749,400	897,200	819,100
24	599,100	599,100	698,950	662,850	797,200	730,850	890,100	798,800
25	582,300	582,300	685,950	644,250	787,300	710,350	882,250	776,400
26	564,050	564,050	671,500	624,050	776,200	688,050	873,550	752,100
27	544,600	544,600	655,550	602,550	763,850	664,350	863,900	726,150
28	524,250	524,250	638,200	580,000	750,200	639,500	853,200	699,000
29	503,400	503,400	619,600	556,950	735,200	614,050	841,400	671,150
30	482,350	482,350	600,000	533,650	718,900	588,350	828,400	643,100

Notes:

1. Final design shall include a complete analysis including the verification of the bearing capacity and fire-resistance requirements.
2. The tabulated values are based on dry service conditions, normal duration of loading, and on simply axially loaded columns subjected to concentric end loads (no eccentricity). P_{rx} and P_{ry} are the compressive capacity parallel to grain about the X-X (strong) axis and the Y-Y (weak) axis, respectively.
3. For L ≤ 6 ft, use P_r for L = 6 ft.
4. L = unsupported length.

Columns – Allowable Compressive Capacities (continued)

Column width – 19-3/4 in.

L (ft)	Depth (in.)							
	19-3/4		21-1/2		23-1/2		25-1/2	
	P_{rx} (lbf)	P_{ry} (lbf)	P_{rx} (lbf)	P_{ry} (lbf)	P_{rx} (lbf)	P_{ry} (lbf)	P_{rx} (lbf)	P_{ry} (lbf)
6	893,550	893,550	973,350	972,700	1,064,500	1,063,200	1,155,550	1,153,650
7	892,150	892,150	972,100	971,200	1,063,350	1,061,550	1,154,550	1,151,900
8	890,550	890,550	970,650	969,450	1,062,050	1,059,650	1,153,350	1,149,800
9	888,650	888,650	968,950	967,400	1,060,500	1,057,400	1,151,950	1,147,400
10	886,500	886,500	967,000	965,050	1,058,800	1,054,800	1,150,400	1,144,600
11	884,000	884,000	964,800	962,350	1,056,800	1,051,850	1,148,600	1,141,350
12	881,150	881,150	962,250	959,250	1,054,600	1,048,500	1,146,600	1,137,700
13	877,950	877,950	959,450	955,750	1,052,100	1,044,650	1,144,400	1,133,550
14	874,300	874,300	956,250	951,750	1,049,300	1,040,300	1,141,900	1,128,800
15	870,150	870,150	952,650	947,250	1,046,200	1,035,350	1,139,150	1,123,450
16	865,450	865,450	948,650	942,150	1,042,750	1,029,800	1,136,150	1,117,400
17	860,150	860,150	944,150	936,350	1,038,950	1,023,500	1,132,800	1,110,600
18	854,150	854,150	939,150	929,850	1,034,700	1,016,350	1,129,100	1,102,850
19	847,350	847,350	933,500	922,450	1,029,950	1,008,250	1,125,050	1,094,050
20	839,700	839,700	927,200	914,100	1,024,750	999,100	1,120,600	1,084,150
21	830,950	830,950	920,100	904,600	1,018,950	988,750	1,115,700	1,072,900
22	821,100	821,100	912,200	893,900	1,012,500	977,050	1,110,300	1,060,200
23	810,000	810,000	903,300	881,750	1,005,350	963,750	1,104,350	1,045,800
24	797,450	797,450	893,350	868,100	997,450	948,850	1,097,800	1,029,600
25	783,350	783,350	882,200	852,750	988,650	932,100	1,090,600	1,011,400
26	767,700	767,700	869,750	835,700	978,850	913,450	1,082,700	991,200
27	750,350	750,350	855,950	816,850	968,050	892,850	1,073,950	968,800
28	731,450	731,450	840,650	796,300	956,050	870,350	1,064,350	944,400
29	711,100	711,100	823,850	774,100	942,850	846,150	1,053,750	918,150
30	689,500	689,500	805,550	750,600	928,300	820,450	1,042,150	890,250

Notes:

1. Final design shall include a complete analysis including the verification of the bearing capacity and fire-resistance requirements.
2. The tabulated values are based on dry service conditions, normal duration of loading, and on simply axially loaded columns subjected to concentric end loads (no eccentricity). P_{rx} and P_{ry} are the compressive capacity parallel to grain about the X-X (strong) axis and the Y-Y (weak) axis, respectively.
3. For L ≤ 6 ft, use P_r for L = 6 ft.
4. L = unsupported length.

Columns – Allowable Compressive Capacities (continued)

Column width – 21-3/4 in.

L (ft)	Depth (in.)							
	21-3/4		23-1/2		25-1/2		27-1/2	
	P_{rx} (lbf)	P_{ry} (lbf)	P_{rx} (lbf)	P_{ry} (lbf)	P_{rx} (lbf)	P_{ry} (lbf)	P_{rx} (lbf)	P_{ry} (lbf)
6	1,084,450	1,084,450	1,172,250	1,171,700	1,272,600	1,271,400	1,372,850	1,371,150
7	1,083,100	1,083,100	1,171,050	1,170,250	1,271,450	1,269,850	1,371,850	1,369,450
8	1,081,500	1,081,500	1,169,600	1,168,550	1,270,150	1,268,000	1,370,600	1,367,450
9	1,079,700	1,079,700	1,167,900	1,166,550	1,268,600	1,265,850	1,369,200	1,365,100
10	1,077,550	1,077,550	1,166,000	1,164,250	1,266,900	1,263,350	1,367,650	1,362,450
11	1,075,150	1,075,150	1,163,800	1,161,650	1,264,900	1,260,550	1,365,850	1,359,400
12	1,072,450	1,072,450	1,161,350	1,158,750	1,262,700	1,257,350	1,363,850	1,355,950
13	1,069,350	1,069,350	1,158,650	1,155,400	1,260,250	1,253,750	1,361,600	1,352,100
14	1,065,950	1,065,950	1,155,550	1,151,700	1,257,550	1,249,700	1,359,150	1,347,750
15	1,062,050	1,062,050	1,152,150	1,147,500	1,254,500	1,245,200	1,356,450	1,342,850
16	1,057,750	1,057,750	1,148,350	1,142,850	1,251,200	1,240,100	1,353,450	1,337,350
17	1,052,900	1,052,900	1,144,150	1,137,600	1,247,500	1,234,450	1,350,200	1,331,250
18	1,047,500	1,047,500	1,139,450	1,131,750	1,243,450	1,228,100	1,346,600	1,324,400
19	1,041,450	1,041,450	1,134,250	1,125,200	1,239,000	1,221,000	1,342,700	1,316,750
20	1,034,650	1,034,650	1,128,500	1,117,900	1,234,100	1,213,050	1,338,400	1,308,200
21	1,027,050	1,027,050	1,122,150	1,109,700	1,228,650	1,204,150	1,333,750	1,298,600
22	1,018,600	1,018,600	1,115,050	1,100,550	1,222,750	1,194,200	1,328,600	1,287,850
23	1,009,050	1,009,050	1,107,200	1,090,250	1,216,200	1,183,050	1,323,000	1,275,850
24	998,450	998,450	1,098,450	1,078,750	1,209,000	1,170,600	1,316,900	1,262,400
25	986,550	986,550	1,088,750	1,065,900	1,201,050	1,156,650	1,310,200	1,247,350
26	973,300	973,300	1,078,000	1,051,600	1,192,300	1,141,100	1,302,900	1,230,600
27	958,500	958,500	1,066,050	1,035,650	1,182,700	1,123,800	1,294,950	1,211,950
28	942,200	942,200	1,052,850	1,018,000	1,172,100	1,104,650	1,286,200	1,191,300
29	924,250	924,250	1,038,300	998,600	1,160,500	1,083,600	1,276,650	1,168,600
30	904,650	904,650	1,022,300	977,450	1,147,700	1,060,650	1,266,200	1,143,850

Notes:

1. Final design shall include a complete analysis including the verification of the bearing capacity and fire-resistance requirements.
2. The tabulated values are based on dry service conditions, normal duration of loading, and on simply axially loaded columns subjected to concentric end loads (no eccentricity). P_{rx} and P_{ry} are the compressive capacity parallel to grain about the X-X (strong) axis and the Y-Y (weak) axis, respectively.
3. For L ≤ 6 ft, use P_r for L = 6 ft.
4. L = unsupported length.

Columns – Allowable Compressive Capacities (continued)

Column width – 23-3/4 in.

L (ft)	Depth (in.)							
	23-3/4		25-1/2		27-1/2		29-1/2	
	P_{rx} (lbf)	P_{ry} (lbf)	P_{rx} (lbf)	P_{ry} (lbf)	P_{rx} (lbf)	P_{ry} (lbf)	P_{rx} (lbf)	P_{ry} (lbf)
6	1,293,750	1,293,750	1,389,600	1,389,100	1,499,100	1,498,050	1,608,600	1,607,000
7	1,292,450	1,292,450	1,388,400	1,387,650	1,498,000	1,496,500	1,607,500	1,605,350
8	1,290,850	1,290,850	1,386,950	1,386,000	1,496,650	1,494,700	1,606,300	1,603,400
9	1,289,050	1,289,050	1,385,250	1,384,050	1,495,100	1,492,600	1,604,900	1,601,150
10	1,287,000	1,287,000	1,383,400	1,381,800	1,493,400	1,490,200	1,603,300	1,598,600
11	1,284,650	1,284,650	1,381,250	1,379,300	1,491,450	1,487,500	1,601,500	1,595,650
12	1,282,000	1,282,000	1,378,850	1,376,500	1,489,250	1,484,450	1,599,500	1,592,400
13	1,279,050	1,279,050	1,376,150	1,373,300	1,486,850	1,481,000	1,597,250	1,588,750
14	1,275,750	1,275,750	1,373,200	1,369,750	1,484,150	1,477,200	1,594,800	1,584,650
15	1,272,100	1,272,100	1,369,900	1,365,850	1,481,200	1,472,950	1,592,150	1,580,100
16	1,268,050	1,268,050	1,366,250	1,361,450	1,477,950	1,468,250	1,589,200	1,575,000
17	1,263,500	1,263,500	1,362,200	1,356,600	1,474,350	1,463,000	1,585,950	1,569,400
18	1,258,500	1,258,500	1,357,800	1,351,250	1,470,450	1,457,200	1,582,450	1,563,200
19	1,252,950	1,252,950	1,352,900	1,345,250	1,466,150	1,450,800	1,578,650	1,556,300
20	1,246,800	1,246,800	1,347,550	1,338,650	1,461,500	1,443,650	1,574,500	1,548,650
21	1,239,950	1,239,950	1,341,650	1,331,350	1,456,350	1,435,750	1,569,950	1,540,150
22	1,232,400	1,232,400	1,335,150	1,323,200	1,450,800	1,427,000	1,565,050	1,530,800
23	1,224,050	1,224,050	1,328,000	1,314,250	1,444,650	1,417,300	1,559,700	1,520,400
24	1,214,750	1,214,750	1,320,150	1,304,250	1,438,000	1,406,550	1,553,900	1,508,850
25	1,204,450	1,204,450	1,311,500	1,293,200	1,430,700	1,394,600	1,547,600	1,496,050
26	1,193,000	1,193,000	1,301,950	1,280,900	1,422,700	1,381,400	1,540,800	1,481,850
27	1,180,350	1,180,350	1,291,450	1,267,350	1,414,000	1,366,750	1,533,350	1,466,150
28	1,166,350	1,166,350	1,279,900	1,252,300	1,404,450	1,350,500	1,525,300	1,448,750
29	1,150,900	1,150,900	1,267,200	1,235,700	1,394,050	1,332,650	1,516,500	1,429,550
30	1,133,950	1,133,950	1,253,250	1,217,500	1,382,650	1,312,950	1,506,950	1,408,450

Notes:

1. Final design shall include a complete analysis including the verification of the bearing capacity and fire-resistance requirements.
2. The tabulated values are based on dry service conditions, normal duration of loading, and on simply axially loaded columns subjected to concentric end loads (no eccentricity). P_{rx} and P_{ry} are the compressive capacity parallel to grain about the X-X (strong) axis and the Y-Y (weak) axis, respectively.
3. For L ≤ 6 ft, use P_r for L = 6 ft.
4. L = unsupported length.

Columns – Fire Resistance

Columns – Allowable Concentric End Load, P (lbf)

L (ft)	Fire-resistance rating (min)	Width – 7-1/4 in.				Width – 8-1/2 in.			
		Depth (in.)				Depth (in.)			
		7-1/4	9-1/2	11-1/2	13-1/2	8-1/2	11-1/2	13-1/2	15-1/2
6	30	116,300	152,400	184,500	216,550	161,850	219,000	257,100	295,200
	60	47,250	76,400	102,300	128,200	118,300	190,750	239,050	287,350
	90	-	-	-	-	40,400	75,200	98,350	121,550
	120	-	-	-	-	-	-	-	-
7	30	114,000	149,400	180,850	212,350	159,950	216,400	254,000	291,650
	60	36,650	59,300	79,400	99,550	102,800	165,800	207,800	249,800
	90	-	-	-	-	31,050	57,800	75,650	93,450
	120	-	-	-	-	-	-	-	-
8	30	105,600	145,250	175,800	206,400	157,350	212,900	249,900	286,950
	60	28,800	46,600	62,450	78,250	86,000	138,700	173,850	209,000
	90	-	-	-	-	24,300	45,250	59,200	73,150
	120	-	-	-	-	-	-	-	-
9	30	88,550	126,900	160,950	195,050	153,900	208,250	244,450	280,650
	60	23,100	37,350	50,050	62,700	71,200	114,800	143,900	172,950
	90	-	-	-	-	19,400	36,150	47,350	58,500
	120	-	-	-	-	-	-	-	-
10	30	74,150	106,250	134,800	163,350	149,350	202,050	237,150	272,300
	60	18,850	30,500	40,850	51,250	59,150	95,450	119,600	143,800
	90	-	-	-	-	15,800	29,500	38,600	47,700
	120	-	-	-	-	-	-	-	-
11	30	62,550	89,600	113,650	137,750	139,450	193,900	227,600	261,350
	60	15,650	25,350	33,950	42,550	49,650	80,100	100,450	120,750
	90	-	-	-	-	13,100	24,450	32,000	39,550
	120	-	-	-	-	-	-	-	-
12	30	53,200	76,250	96,750	117,250	120,800	177,000	214,450	247,450
	60	13,150	21,350	28,600	35,850	42,150	68,000	85,250	102,500
	90	-	-	-	-	11,000	20,550	26,900	33,300
	120	-	-	-	-	-	-	-	-
13	30	45,750	65,550	83,150	100,750	104,950	153,800	186,400	218,950
	60	11,200	18,200	24,400	30,600	36,150	58,350	73,150	87,900
	90	-	-	-	-	9,350	17,500	22,950	28,350
	120	-	-	-	-	-	-	-	-
14	30	39,650	56,850	72,150	87,400	91,750	134,450	162,900	191,350
	60	9,650	15,700	21,050	26,350	31,300	50,500	63,350	76,150
	90	-	-	-	-	8,050	15,050	19,750	24,400
	120	-	-	-	-	-	-	-	-
15	30	34,700	49,750	63,100	76,450	80,650	118,200	143,250	168,300
	60	8,400	13,650	18,300	22,950	27,350	44,150	55,350	66,550
	90	-	-	-	-	6,950	13,050	17,150	21,200
	120	-	-	-	-	-	-	-	-

Notes:

1. Final design shall include a complete analysis including the verification of the bearing capacity.
2. The tabulated values are based on dry service conditions, normal duration of loading, and on simply axially loaded columns exposed on four sides and subjected to concentric end loads (no eccentricity).
3. For L ≤ 6 ft, use P for L = 6 ft.
4. L = unsupported length.

Columns – Allowable Concentric End Load, P (lbf) (continued)

L (ft)	Fire-resistance rating (min)	Width – 9-1/2 in.				Width – 11-1/2 in.			
		Depth (in.)				Depth (in.)			
		9-1/2	11-1/2	13-1/2	15-1/2	11-1/2	13-1/2	15-1/2	17-1/2
6	30	203,400	246,200	289,050	331,850	300,100	352,300	404,500	456,700
	60	187,300	246,200	289,050	331,850	300,100	352,300	404,500	456,700
	90	92,800	134,100	175,450	216,750	232,700	304,400	376,050	447,750
	120	28,400	46,350	64,300	82,250	136,350	189,050	241,800	294,550
7	30	201,600	244,050	286,500	328,950	298,500	350,400	402,350	454,250
	60	175,000	234,300	286,500	328,950	298,500	350,400	402,350	454,250
	90	77,450	111,950	146,450	180,900	222,250	290,700	359,150	427,650
	120	21,500	35,100	48,700	62,300	121,450	168,450	215,450	262,450
8	30	199,300	241,250	283,250	325,200	296,500	348,050	399,650	451,200
	60	157,600	211,050	264,500	317,950	296,500	348,050	399,650	451,200
	90	63,050	91,150	119,300	147,400	206,850	270,600	334,350	398,100
	120	16,700	27,250	37,850	48,400	103,700	143,850	183,950	224,100
9	30	196,350	237,650	279,000	320,350	294,000	345,150	396,300	447,450
	60	137,350	183,950	230,550	277,150	294,000	345,150	396,300	447,450
	90	51,450	74,400	97,300	120,250	186,700	244,200	301,750	359,300
	120	13,250	21,700	30,100	38,550	86,800	120,450	154,050	187,650
10	30	192,500	233,000	273,550	314,050	290,950	341,600	392,200	442,800
	60	117,700	157,650	197,600	237,550	290,950	341,600	392,200	442,800
	90	42,400	61,350	80,300	99,200	164,250	214,900	265,500	316,150
	120	10,750	17,600	24,450	31,300	72,600	100,750	128,850	157,000
11	30	187,500	227,000	266,500	305,950	287,200	337,150	387,100	437,050
	60	100,600	134,700	168,850	203,000	274,950	337,150	387,100	437,050
	90	35,450	51,250	67,100	82,900	142,700	186,700	230,700	274,700
	120	8,850	14,550	20,200	25,900	61,150	84,850	108,550	132,250
12	30	181,150	219,300	257,450	295,600	282,550	331,700	380,850	429,950
	60	86,300	115,600	144,900	174,150	247,650	310,350	373,100	429,950
	90	29,950	43,350	56,750	70,150	123,650	161,800	199,950	238,050
	120	7,400	12,200	16,950	21,750	52,000	72,150	92,300	112,500
13	30	173,200	209,700	246,150	282,600	276,800	324,950	373,050	421,200
	60	74,550	99,850	125,150	150,450	220,900	276,850	332,800	388,800
	90	25,600	37,100	48,550	60,050	107,500	140,650	173,800	206,950
	120	6,250	10,350	14,400	18,450	44,600	61,950	79,300	96,600
14	30	158,350	198,150	232,650	267,100	269,700	316,600	363,550	410,450
	60	64,850	86,900	108,950	130,950	196,400	246,150	295,900	345,650
	90	22,150	32,050	41,950	51,900	93,950	122,900	151,900	180,900
	120	5,350	8,850	12,350	15,850	38,650	53,650	68,700	83,750
15	30	140,250	177,950	215,600	249,650	261,100	306,550	351,950	397,350
	60	56,850	76,200	95,500	114,850	174,700	219,000	263,250	307,550
	90	19,300	27,950	36,600	45,250	82,600	108,100	133,600	159,100
	120	4,600	7,650	10,700	13,750	33,750	46,900	60,000	73,150

Notes:

1. Final design shall include a complete analysis including the verification of the bearing capacity.
2. The tabulated values are based on dry service conditions, normal duration of loading, and on simply axially loaded columns exposed on four sides and subjected to concentric end loads (no eccentricity).
3. For L ≤ 6 ft, use P for L = 6 ft.
4. L = unsupported length.

Columns – Allowable Concentric End Load, P (lbf) (continued)

L (ft)	Fire-resistance rating (min)	Width – 13-5/8 in.				Width – 15-1/2 in.			
		Depth (in.)				Depth (in.)			
		13-5/8	15-1/2	17-1/2	19-1/2	15-1/2	17-1/2	19-1/2	21-1/2
6	30	422,950	481,150	543,250	605,300	548,550	619,300	690,100	760,850
	60	422,950	481,150	543,250	605,300	548,550	619,300	690,100	760,850
	90	422,950	481,150	543,250	605,300	548,550	619,300	690,100	760,850
	120	300,150	377,250	459,500	541,800	485,200	591,000	690,100	760,850
7	30	421,400	479,400	541,300	603,150	547,050	617,650	688,200	758,800
	60	421,400	479,400	541,300	603,150	547,050	617,650	688,200	758,800
	90	419,150	479,400	541,300	603,150	547,050	617,650	688,200	758,800
	120	291,450	366,350	446,200	526,100	478,600	582,950	687,300	758,800
8	30	419,550	477,300	538,900	600,500	545,250	615,600	686,000	756,350
	60	419,550	477,300	538,900	600,500	545,250	615,600	686,000	756,350
	90	409,450	477,300	538,900	600,500	545,250	615,600	686,000	756,350
	120	278,800	350,450	426,900	503,350	469,650	572,100	674,500	756,350
9	30	417,350	474,800	536,050	597,300	543,150	613,250	683,350	753,400
	60	417,350	474,800	536,050	597,300	543,150	613,250	683,350	753,400
	90	396,150	474,800	536,050	597,300	543,150	613,250	683,350	753,400
	120	261,150	328,300	399,900	471,500	457,600	557,400	657,200	753,400
10	30	414,700	471,750	532,650	593,500	540,700	610,450	680,250	750,000
	60	414,700	471,750	532,650	593,500	540,700	610,450	680,250	750,000
	90	378,150	460,400	532,650	593,500	540,700	610,450	680,250	750,000
	120	238,650	300,000	365,450	430,900	441,450	537,700	634,000	730,300
11	30	411,500	468,150	528,550	588,950	537,800	607,200	676,600	746,000
	60	411,500	468,150	528,550	588,950	537,800	607,200	676,600	746,000
	90	354,850	432,100	514,500	588,950	537,800	607,200	676,600	746,000
	120	213,550	268,450	327,050	385,600	420,250	511,900	603,550	695,200
12	30	407,750	463,850	523,700	583,550	534,450	603,400	672,350	741,300
	60	407,750	463,850	523,700	583,550	534,450	603,400	672,350	741,300
	90	327,200	398,450	474,400	550,400	534,450	603,400	672,350	741,300
	120	188,750	237,300	289,100	340,900	393,850	479,750	565,700	651,600
13	30	403,200	458,700	517,900	577,100	530,500	598,950	667,400	735,850
	60	403,200	458,700	517,900	577,100	530,500	598,950	667,400	735,850
	90	297,450	362,200	431,250	500,300	530,500	598,950	667,400	735,850
	120	166,150	208,900	254,500	300,100	363,600	442,900	522,250	601,550
14	30	397,800	452,550	510,950	569,350	525,900	593,750	661,600	729,500
	60	397,800	452,550	510,950	569,350	525,900	593,750	661,600	729,500
	90	268,050	326,400	388,650	450,900	506,200	593,750	661,600	729,500
	120	146,400	184,100	224,300	264,500	331,750	404,150	476,550	548,900
15	30	391,350	445,250	502,700	560,150	520,550	587,700	654,850	722,050
	60	391,350	445,250	502,700	560,150	520,550	587,700	654,850	722,050
	90	240,650	293,100	349,000	404,900	471,050	560,850	650,700	722,050
	120	129,450	162,800	198,350	233,900	300,650	366,250	431,850	497,450

Notes:

1. Final design shall include a complete analysis including the verification of the bearing capacity.
2. The tabulated values are based on dry service conditions, normal duration of loading, and on simply axially loaded columns exposed on four sides and subjected to concentric end loads (no eccentricity).
3. For L ≤ 6 ft, use P for L = 6 ft.
4. L = unsupported length.

Columns – Allowable Concentric End Load, P (lbf) (continued)

L (ft)	Fire-resistance rating (min)	Width – 17-5/8 in.				Width – 19-3/4 in.			
		Depth (in.)				Depth (in.)			
		17-5/8	19-1/2	21-1/2	23-1/2	19-3/4	21-1/2	23-1/2	25-1/2
6	30	710,350	785,950	866,550	947,150	892,950	972,100	1,062,500	1,152,950
	60	710,350	785,950	866,550	947,150	892,950	972,100	1,062,500	1,152,950
	90	710,350	785,950	866,550	947,150	892,950	972,100	1,062,500	1,152,950
	120	710,350	785,950	866,550	947,150	892,950	972,100	1,062,500	1,152,950
7	30	708,900	784,300	864,750	945,200	891,500	970,500	1,060,750	1,151,050
	60	708,900	784,300	864,750	945,200	891,500	970,500	1,060,750	1,151,050
	90	708,900	784,300	864,750	945,200	891,500	970,500	1,060,750	1,151,050
	120	708,900	784,300	864,750	945,200	891,500	970,500	1,060,750	1,151,050
8	30	707,150	782,400	862,650	942,900	889,800	968,650	1,058,750	1,148,850
	60	707,150	782,400	862,650	942,900	889,800	968,650	1,058,750	1,148,850
	90	707,150	782,400	862,650	942,900	889,800	968,650	1,058,750	1,148,850
	120	707,150	782,400	862,650	942,900	889,800	968,650	1,058,750	1,148,850
9	30	705,150	780,150	860,200	940,200	887,800	966,500	1,056,400	1,146,300
	60	705,150	780,150	860,200	940,200	887,800	966,500	1,056,400	1,146,300
	90	705,150	780,150	860,200	940,200	887,800	966,500	1,056,400	1,146,300
	120	705,150	780,150	860,200	940,200	887,800	966,500	1,056,400	1,146,300
10	30	702,800	777,600	857,350	937,100	885,550	964,000	1,053,700	1,143,350
	60	702,800	777,600	857,350	937,100	885,550	964,000	1,053,700	1,143,350
	90	702,800	777,600	857,350	937,100	885,550	964,000	1,053,700	1,143,350
	120	702,800	777,600	857,350	937,100	885,550	964,000	1,053,700	1,143,350
11	30	700,100	774,600	854,050	933,500	882,950	961,200	1,050,600	1,140,000
	60	700,100	774,600	854,050	933,500	882,950	961,200	1,050,600	1,140,000
	90	700,100	774,600	854,050	933,500	882,950	961,200	1,050,600	1,140,000
	120	695,550	774,600	854,050	933,500	882,950	961,200	1,050,600	1,140,000
12	30	697,000	771,150	850,250	929,350	880,000	958,000	1,047,100	1,136,250
	60	697,000	771,150	850,250	929,350	880,000	958,000	1,047,100	1,136,250
	90	697,000	771,150	850,250	929,350	880,000	958,000	1,047,100	1,136,250
	120	676,550	771,150	850,250	929,350	880,000	958,000	1,047,100	1,136,250
13	30	693,450	767,250	845,900	924,600	876,700	954,400	1,043,150	1,131,950
	60	693,450	767,250	845,900	924,600	876,700	954,400	1,043,150	1,131,950
	90	693,450	767,250	845,900	924,600	876,700	954,400	1,043,150	1,131,950
	120	652,700	761,050	845,900	924,600	876,700	954,400	1,043,150	1,131,950
14	30	689,400	762,750	840,950	919,200	872,950	950,300	1,038,700	1,127,100
	60	689,400	762,750	840,950	919,200	872,950	950,300	1,038,700	1,127,100
	90	689,400	762,750	840,950	919,200	872,950	950,300	1,038,700	1,127,100
	120	623,550	727,050	837,500	919,200	872,950	950,300	1,038,700	1,127,100
15	30	684,750	757,550	835,250	912,950	868,700	945,700	1,033,650	1,121,650
	60	684,750	757,550	835,250	912,950	868,700	945,700	1,033,650	1,121,650
	90	684,750	757,550	835,250	912,950	868,700	945,700	1,033,650	1,121,650
	120	589,500	687,350	791,750	896,150	868,700	945,700	1,033,650	1,121,650

Notes:

1. Final design shall include a complete analysis including the verification of the bearing capacity.
2. The tabulated values are based on dry service conditions, normal duration of loading, and on simply axially loaded columns exposed on four sides and subjected to concentric end loads (no eccentricity).
3. For L ≤ 6 ft, use P for L = 6 ft.
4. L = unsupported length.

Columns – Allowable Concentric End Load, P (lbf) (continued)

L (ft)	Fire-resistance rating (min)	Width – 21-3/4 in.				Width – 23-3/4 in.			
		Depth (in.)				Depth (in.)			
		21-3/4	23-1/2	25-1/2	27-1/2	23-3/4	25-1/2	27-1/2	29-1/2
6	30	1,083,750	1,170,950	1,270,600	1,370,250	1,292,950	1,388,200	1,497,100	1,605,950
	60	1,083,750	1,170,950	1,270,600	1,370,250	1,292,950	1,388,200	1,497,100	1,605,950
	90	1,083,750	1,170,950	1,270,600	1,370,250	1,292,950	1,388,200	1,497,100	1,605,950
	120	1,083,750	1,170,950	1,270,600	1,370,250	1,292,950	1,388,200	1,497,100	1,605,950
7	30	1,082,300	1,169,350	1,268,900	1,368,400	1,291,450	1,386,650	1,495,400	1,604,150
	60	1,082,300	1,169,350	1,268,900	1,368,400	1,291,450	1,386,650	1,495,400	1,604,150
	90	1,082,300	1,169,350	1,268,900	1,368,400	1,291,450	1,386,650	1,495,400	1,604,150
	120	1,082,300	1,169,350	1,268,900	1,368,400	1,291,450	1,386,650	1,495,400	1,604,150
8	30	1,080,600	1,167,550	1,266,900	1,366,250	1,289,750	1,384,800	1,493,400	1,602,000
	60	1,080,600	1,167,550	1,266,900	1,366,250	1,289,750	1,384,800	1,493,400	1,602,000
	90	1,080,600	1,167,550	1,266,900	1,366,250	1,289,750	1,384,800	1,493,400	1,602,000
	120	1,080,600	1,167,550	1,266,900	1,366,250	1,289,750	1,384,800	1,493,400	1,602,000
9	30	1,078,650	1,165,400	1,264,600	1,363,800	1,287,800	1,382,700	1,491,150	1,599,600
	60	1,078,650	1,165,400	1,264,600	1,363,800	1,287,800	1,382,700	1,491,150	1,599,600
	90	1,078,650	1,165,400	1,264,600	1,363,800	1,287,800	1,382,700	1,491,150	1,599,600
	120	1,078,650	1,165,400	1,264,600	1,363,800	1,287,800	1,382,700	1,491,150	1,599,600
10	30	1,076,400	1,163,000	1,262,000	1,361,000	1,285,600	1,380,350	1,488,600	1,596,850
	60	1,076,400	1,163,000	1,262,000	1,361,000	1,285,600	1,380,350	1,488,600	1,596,850
	90	1,076,400	1,163,000	1,262,000	1,361,000	1,285,600	1,380,350	1,488,600	1,596,850
	120	1,076,400	1,163,000	1,262,000	1,361,000	1,285,600	1,380,350	1,488,600	1,596,850
11	30	1,073,900	1,160,300	1,259,050	1,357,800	1,283,150	1,377,700	1,485,750	1,593,800
	60	1,073,900	1,160,300	1,259,050	1,357,800	1,283,150	1,377,700	1,485,750	1,593,800
	90	1,073,900	1,160,300	1,259,050	1,357,800	1,283,150	1,377,700	1,485,750	1,593,800
	120	1,073,900	1,160,300	1,259,050	1,357,800	1,283,150	1,377,700	1,485,750	1,593,800
12	30	1,071,050	1,157,250	1,255,700	1,354,200	1,280,350	1,374,700	1,482,550	1,590,350
	60	1,071,050	1,157,250	1,255,700	1,354,200	1,280,350	1,374,700	1,482,550	1,590,350
	90	1,071,050	1,157,250	1,255,700	1,354,200	1,280,350	1,374,700	1,482,550	1,590,350
	120	1,071,050	1,157,250	1,255,700	1,354,200	1,280,350	1,374,700	1,482,550	1,590,350
13	30	1,067,850	1,153,800	1,252,000	1,350,200	1,277,300	1,371,400	1,478,950	1,586,500
	60	1,067,850	1,153,800	1,252,000	1,350,200	1,277,300	1,371,400	1,478,950	1,586,500
	90	1,067,850	1,153,800	1,252,000	1,350,200	1,277,300	1,371,400	1,478,950	1,586,500
	120	1,067,850	1,153,800	1,252,000	1,350,200	1,277,300	1,371,400	1,478,950	1,586,500
14	30	1,064,300	1,149,950	1,247,800	1,345,700	1,273,850	1,367,700	1,475,000	1,582,250
	60	1,064,300	1,149,950	1,247,800	1,345,700	1,273,850	1,367,700	1,475,000	1,582,250
	90	1,064,300	1,149,950	1,247,800	1,345,700	1,273,850	1,367,700	1,475,000	1,582,250
	120	1,064,300	1,149,950	1,247,800	1,345,700	1,273,850	1,367,700	1,475,000	1,582,250
15	30	1,060,350	1,145,650	1,243,150	1,340,650	1,270,050	1,363,600	1,470,550	1,577,500
	60	1,060,350	1,145,650	1,243,150	1,340,650	1,270,050	1,363,600	1,470,550	1,577,500
	90	1,060,350	1,145,650	1,243,150	1,340,650	1,270,050	1,363,600	1,470,550	1,577,500
	120	1,060,350	1,145,650	1,243,150	1,340,650	1,270,050	1,363,600	1,470,550	1,577,500

Notes:

1. Final design shall include a complete analysis including the verification of the bearing capacity.
2. The tabulated values are based on dry service conditions, normal duration of loading, and on simply axially loaded columns exposed on four sides and subjected to concentric end loads (no eccentricity).
3. For L ≤ 6 ft, use P for L = 6 ft.
4. L = unsupported length.

Decking – Design Properties and Fire Resistance

Decking – Design Properties

Bending about Y-Y axis	Thickness (in.)			
	1-1/2	1-3/4	2-1/8	3-1/2
Bending moment, M_r (lbf-ft/ft)	766	1,042	1,536	4,682
Shear parallel to grain, V_r (lbf/ft)	2,100	2,450	2,975	7,000
Bending stiffness, E_sI (10^6 lbf-in.^{2}/ft)	5.1	8.0	14	77

Notes:

1. Final design shall include a complete analysis including the verification of the bearing capacity and fire-resistance requirements.
2. The tabulated values are based on dry service conditions and normal duration of loading.

Decking – Allowable Design Load Ratio

Fire-resistance rating (min)	Thickness (in.)			
	1-1/2	1-3/4	2-1/8	3-1/2
0	1.00	1.00	1.00	1.00
30	-	-	-	1.00
60	-	-	-	0.67
90	-	-	-	-
120	-	-	-	-

Notes:

1. The tabulated design load ratios represent the allowable M / M_r ratio to meet fire-resistance requirements.
2. Final design shall include a complete analysis including the verification of the shear and bearing capacities and a consideration for live load and total load deflections. If applicable, the final design shall include a consideration for floor vibration and the verification of a concentrated live load as defined in IBC 1607.4.
3. The tabulated values are based on dry service conditions, normal duration of loading, and the most restrictive of simple span or multiple spans.

Decking – Selection Tables

Bending Moment and Shear Capacities

Allowable uniformal total load (psf)

L (ft)	Thickness (in.) 1-1/2	1-3/4	2-1/8	3-1/2
3.0				
3.5				
4.0	383			
4.5	302			
5.0	245	333		
5.5	202	276		
6.0	170	232	341	
6.5	145	197	291	
7.0	125	170	251	
7.5	109	148	219	
8.0	96	130	192	
8.5	85	115	170	
9.0	76	103	152	
9.5	68	92	136	
10.0	61	83	123	
10.5	56	76	111	340
11.0	51	69	102	310
11.5	46	63	93	283
12.0	42	58	85	260
12.5		53	79	240

Bending moment and shear capacities
- $M_r \geq M$ and $V_r \geq V$

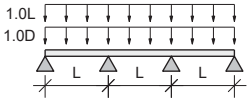

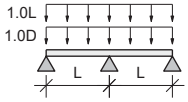

L/240 Deflection Limit

Allowable uniform total load (psf)

L (ft)	Thickness (in.) 1-1/2	1-3/4	2-1/8	3-1/2
3.0				
3.5	345			
4.0	232	368		
4.5	163	259		
5.0	119	189	338	
5.5	90	142	254	
6.0	70	110	196	
6.5	55	87	155	
7.0	44	70	124	
7.5		57	101	
8.0		47	84	
8.5			70	370
9.0			59	312
9.5			51	266
10.0			44	228
10.5				197
11.0				172
11.5				151
12.0				133
12.5				118

Deflection limit
- $\Delta_{tot} \leq L/240$

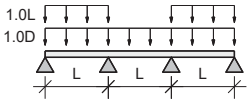

Notes:

1. Final design shall include a complete analysis including the verification of the bending moment, shear, and bearing capacities and a consideration for live load and total load deflections. If applicable, the final design shall include a consideration for floor vibration, the verification of a concentrated live load as defined in IBC 1607.4, and fire-resistance requirements.
2. The tabulated values are based on dry service conditions, normal duration of loading, and on multiple spans. For simple spans, multiply the allowable uniform loads by 0.76.

L/360 Deflection Limit

Allowable uniform live load (psf)

L (ft)	Thickness (in.) 1-1/2	1-3/4	2-1/8	3-1/2
3.0	365			
3.5	230	365		
4.0	154	244		
4.5	108	172	307	
5.0	79	125	224	
5.5	59	94	168	
6.0	46	72	130	
6.5	36	57	102	
7.0	28	46	82	
7.5	23	37	66	
8.0		30	54	293
8.5		25	46	244
9.0		21	38	206
9.5			32	175
10.0			28	150
10.5			24	130
11.0			21	113
11.5				98
12.0				87
12.5				77

Deflection limit
- $\Delta_L \leq L/360$

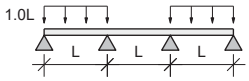

L/480 Deflection Limit

Allowable uniform live load (psf)

L (ft)	Thickness (in.) 1-1/2	1-3/4	2-1/8	3-1/2
3.0	274			
3.5	172	274		
4.0	115	183	328	
4.5	81	129	230	
5.0	59	94	168	
5.5	44	70	126	
6.0	34	54	97	
6.5	27	42	76	
7.0	22	34	61	
7.5		28	50	
8.0		23	41	220
8.5			34	183
9.0			29	154
9.5			24	131
10.0			21	113
10.5				97
11.0				84
11.5				74
12.0				65
12.5				58

Deflection limit
- $\Delta_L \leq L/480$

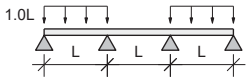

Notes:

1. Final design shall include a complete analysis including the verification of the bending moment, shear, and bearing capacities and a consideration for live load and total load deflections. If applicable, the final design shall include a consideration for floor vibration, the verification of a concentrated live load as defined in IBC 1607.4, and fire-resistance requirements.
2. The tabulated values are based on dry service conditions, normal duration of loading, and on multiple spans. For simple spans, multiply the allowable uniform loads by 0.76.

Decking – Diaphragm

Decking may be used as diaphragms in conjunction with wood structural panels. The decking substructure may be considered as blocked framing, thus, provisions given by the Section 4.2 of the SDPWS may be used for unit shear capacities, deflection of diaphragms and seismic design considerations. Note that openings in the diaphragms alter the load path and require additional considerations.

Allowable Unit Shear Capacity, v_s (plf)

Decking thickness (in.)	Sheathing thickness (in.)	Common nail Size	Common nail Length (in.)	Lines of fasteners	Allowable unit shear capacity, v_s (plf) Seismic Nailing spacing [a] (in.)				Wind Nailing spacing [a] (in.)			
Blocked diaphragms [b]					6 / 6	4 / 6	2-1/2 / 4	2 / 3	6 / 6	4 / 6	2-1/2 / 4	2 / 3
1-1/2	19/32	6d	2	1	194	258	386	437	271	361	541	612
1-3/4	5/16	6d	2	1	174	230	350	396	244	322	490	554
	3/8	6d	2	1	194	258	386	437	271	361	541	612
2-1/8	5/16	6d	2	1	174	230	350	396	244	322	490	554
	3/8	6d	2	1	194	258	386	437	271	361	541	612
	3/8	8d	2-1/2	1	248	332	496	562	347	465	695	787
	7/16	8d	2-1/2	1	263	350	524	593	368	490	734	830
	15/32	8d	2-1/2	1	276	368	552	621	386	515	773	869
3-1/2	5/16	6d	2	1	174	230	350	396	244	322	490	554
	3/8	6d	2	1	194	258	386	437	271	361	541	612
	3/8	8d	2-1/2	1	248	332	496	562	347	465	695	787
	7/16	8d	2-1/2	1	263	350	524	593	368	490	734	830
	15/32	8d	2-1/2	1	276	368	552	621	386	515	773	869
	15/32	10d	3	1	299	396	598	677	419	554	837	948
	19/32	10d	3	1	332	442	662	754	465	619	927	1,056
High load blocked diaphragms [c]					4 / 6	4 / 4	2-1/2 / 4	2-1/2 / 3	4 / 6	4 / 4	2-1/2 / 4	2-1/2 / 3
3-1/2	15/32	10d	3	2	557	749	805	1,017	780	1,049	1,127	1,424
				3	703	999	1,040	1,099	984	1,398	1,456	1,539
	19/32	10d	3	2	695	887	994	1,260	973	1,242	1,392	1,764
				3	861	1,186	1,255	1,367	1,205	1,661	1,757	1,914
	23/32	10d	3	2	759	966	1,081	1,329	1,063	1,352	1,513	1,861
				3	938	1,288	1,362	1,439	1,313	1,803	1,907	2,015

a) First spacing is the nail spacing at diaphragm boundaries and at continuous panel edges parallel to load; second spacing is the nail spacing at other panel edges.

b) For blocked diaphragm, 6d and 8d nails shall be staggered where nail spacing is 2-1/2 inches on center or less. 10d nails shall be staggered if nail spacing is 3 inches on center or less.

c) For high load blocked diaphragm, in diaphragm boundary members, lines of fasteners shall be equally spaced and fasteners within each line shall be staggered where spacing is 3 inches on center or less.

Notes:

1. The tabulated values are based on dry service conditions, *Sheathing and Single-Floor* sheathing grade and on a sheathing specific gravity of 0.42.
2. Diaphgram length-to-width ratio shall not exceed 4:1.
3. Nails shall be located at least 3/8 inch from the edges of panels and a row of nails spaced 12 inches shall be installed every 24 inches spacing along the length of decking.
4. Wood strucural panels shall conform to the requirements for their type in DOC PS1 or PS2 and shall not be less than 4 feet x 8 feet except at boundaries and changes in framing where minimum panel dimension shall be 24 inches. Panel edges shall not coincide with joints in the decking.
5. Diaphragm resistance depends on the direction of continuous panel joints with respect to the loading direction and direction of framing members, and is independent of the panel orientation.
6. For more information, refer to SDPWS Tables 4.2A and 4.2B.

NORDIC

TECHNICAL GUIDE
NORDIC LAM+

NS-GT5

ASD

VERSION
2022-02-01

STRUCTURAL DETAILS 3

NORDIC
STRUCTURES

GENERAL NOTES

1.0 General

1.1 This document supersedes all previous versions. For the latest version, consult nordic.ca or contact Nordic Structures.

1.2 The information contained in this document is provided for information purposes only. This information should not be used for any application without examination and verification of its accuracy, suitability and applicability by a licensed engineer, architect or other professional. Nordic Structures does not guarantee that the information is suitable for any general or particular use, and assumes no responsibility for the use, application of and/or reference to the information.

1.3 All dimensions are in inches (in.), unless otherwise noted.

1.4 For more information, consult nordic.ca or contact Nordic Structures.

2.0 Design of Connections

2.1 The design of connections, including fire resistance if required, shall be in accordance with the National Design Specification (NDS) for Wood Construction 2015.

2.2 The design of connections should include considerations for structural and service performance, such as resistance, minimum distances, dimensional changes, durability, erection and fire safety, among others, as well as taking into account architectural requirements.

2.3 The connections shown in this document are provided for information purposes only, and conceptually. Note that many possibilities and variants are possible.

Structure, GL-CLT | Continuous Floor Slab on Beam | NS-DS2001

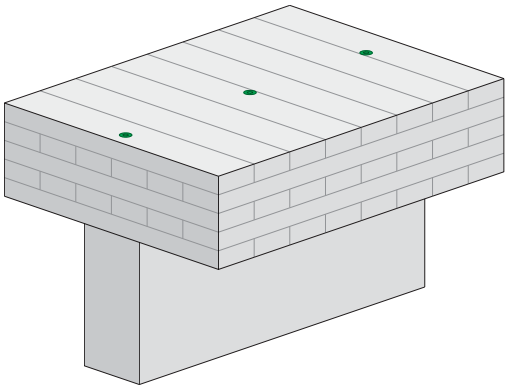

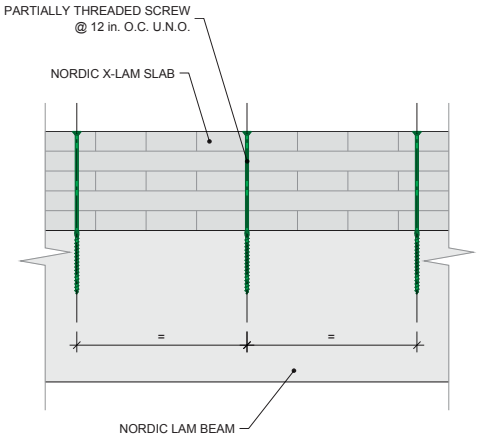

Structure, GL-CLT | Single Floor Slab on Beam | NS-DS2002

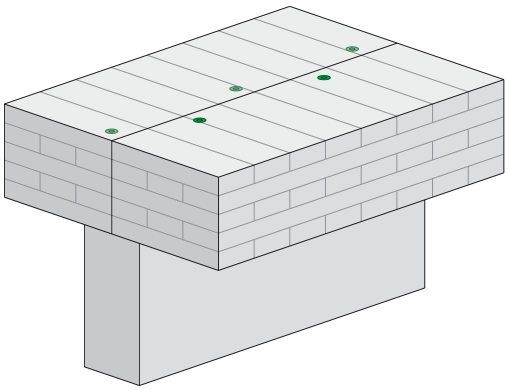

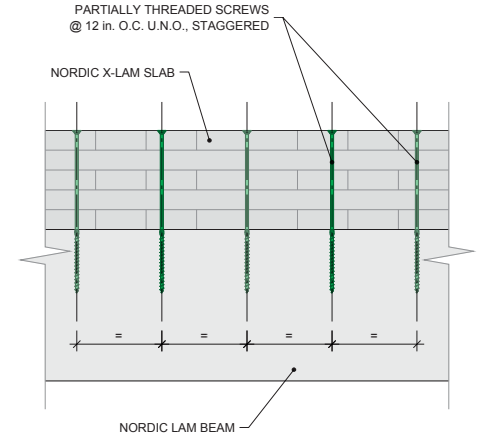

Structure, GL-CLT | Face-mount Hanger | NS-DS2003

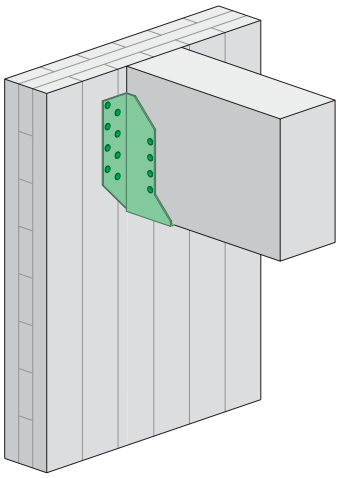

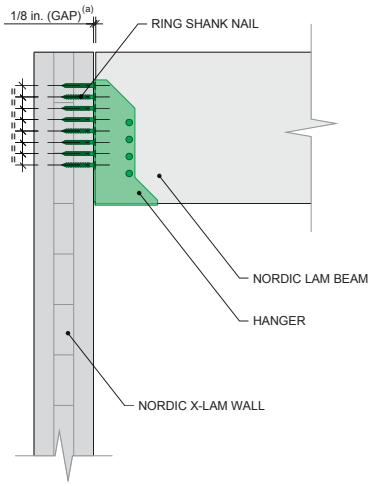

a) The 1/8 in. gap may not be required depending on the detail on the other side of the beam.

Structure, GL-CLT | Face-mount Hanger with Concealed Flanges | NS-DS2067

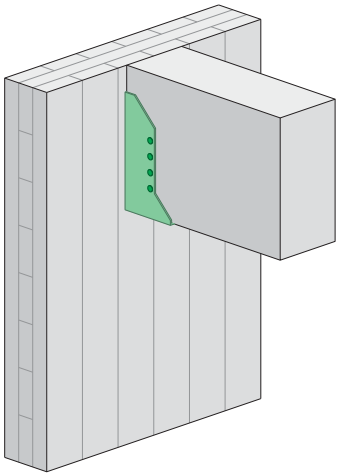

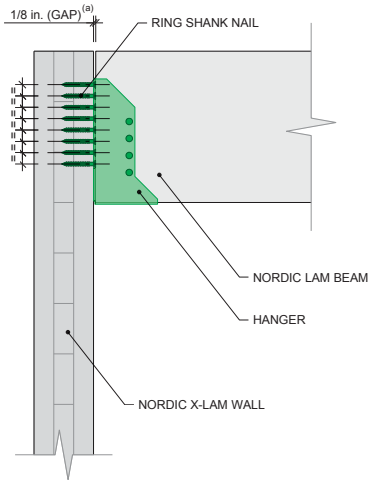

a) The 1/8 in. gap may not be required depending on the detail on the other side of the beam.

Structure, GL-CLT | Knife Plate | NS-DS2004

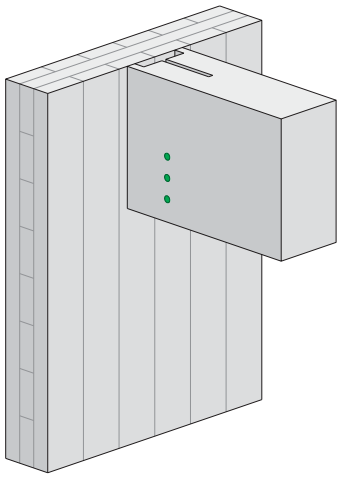

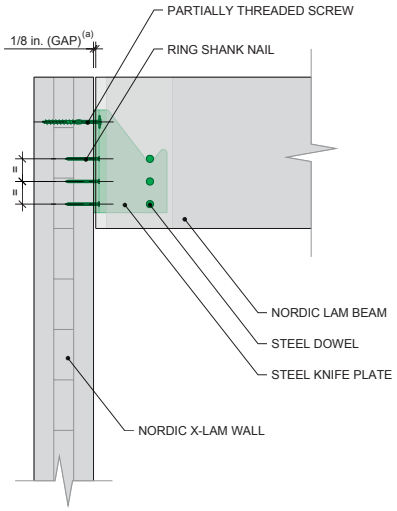

a) The 1/8 in. gap may not be required depending on the detail on the other side of the beam.

Structure, GL-CLT | Knife Plate with Cap | NS-DS2005

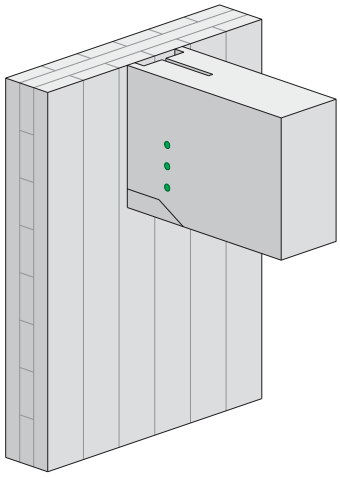

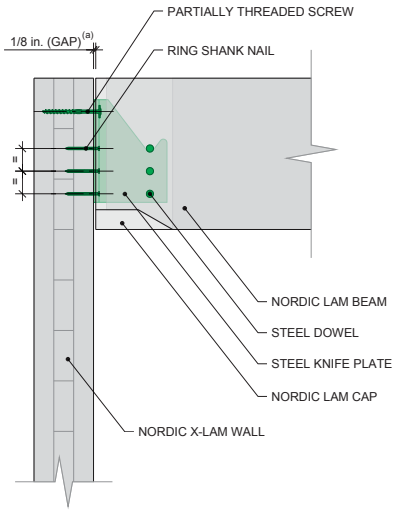

a) The 1/8 in. gap may not be required depending on the detail on the other side of the beam.

Structure, GL-CLT | Screwed Beam to Column | NS-DS2006

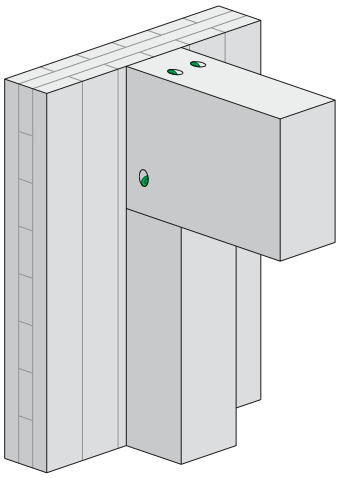

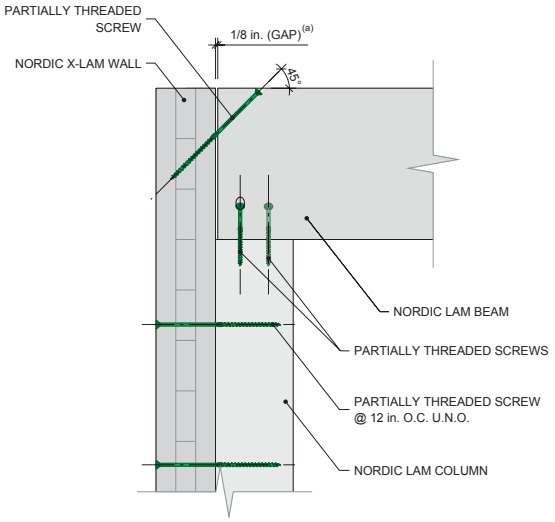

a) The 1/8 in. gap may not be required depending on the detail on the other side of the beam.

Structure, GL-CLT | Beam to Column with Knife Plate | NS-DS2007

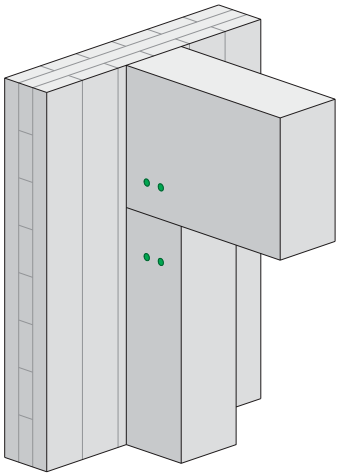

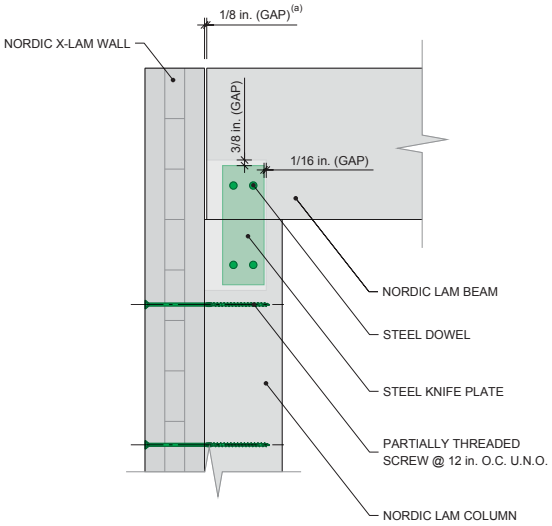

a) The 1/8 in. gap may not be required depending on the detail on the other side of the beam.

Structure, GL-CLT | Pocket for Beam | NS-DS2008

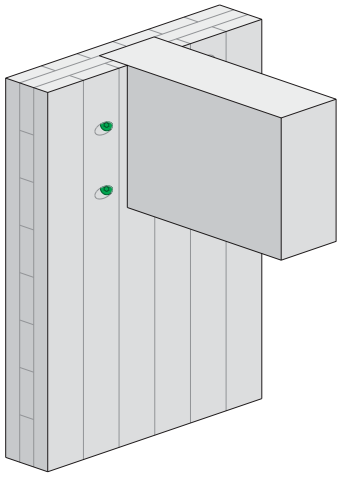

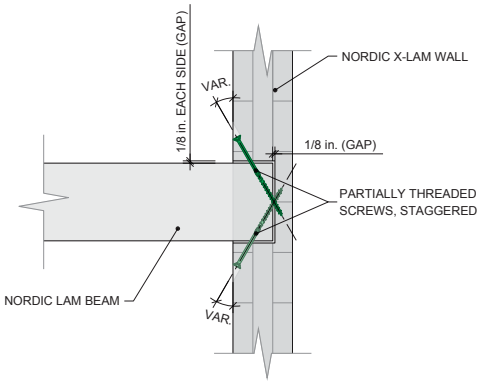

Structure, GL-CLT | Through Pocket for Beam | NS-DS2009

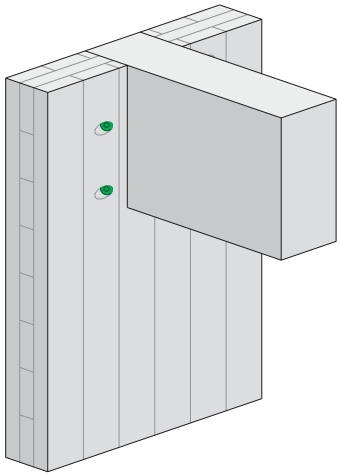

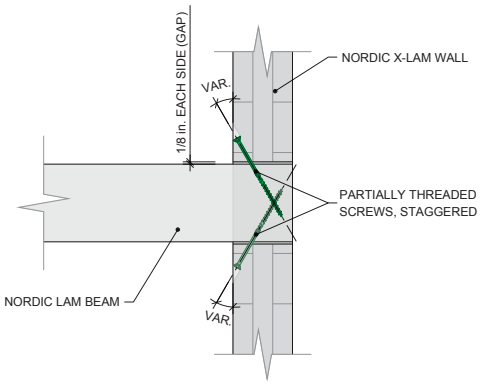

Structure, Floor/Roof-Wall | Ledger | NS-DS2018

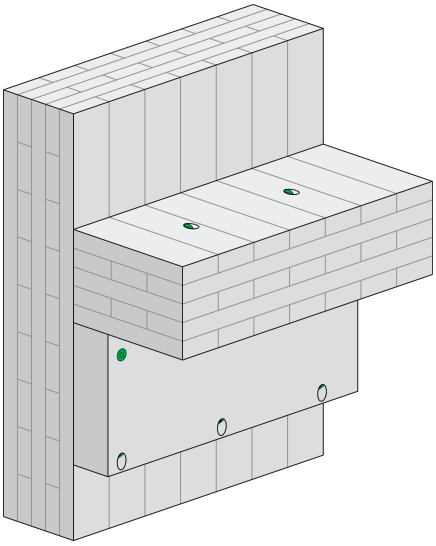

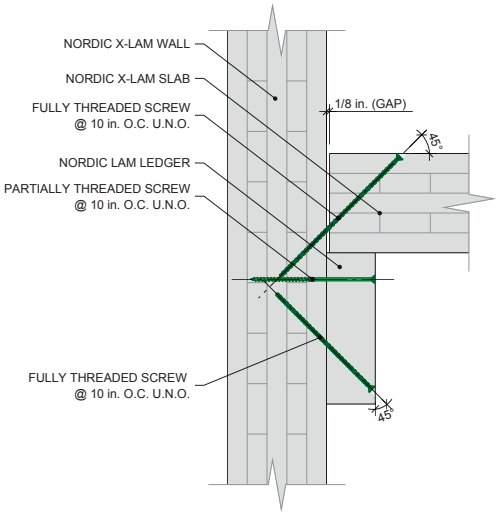

Structure, Lintel | Glulam Lintel | NS-DS2027

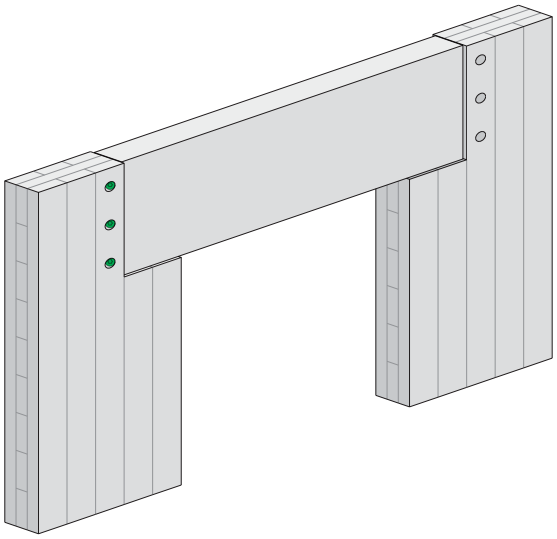

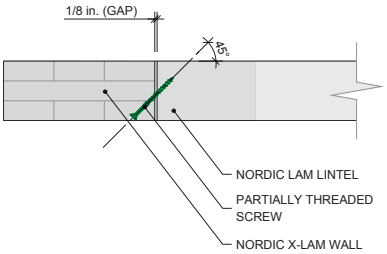

Structure, Base Plate | Base Plate with Steel Square | NS-DS2037

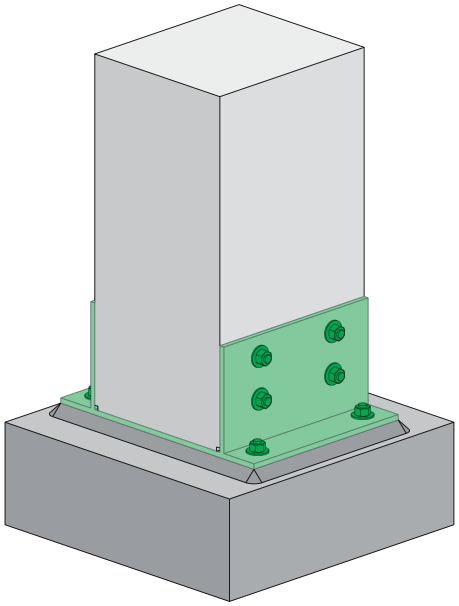

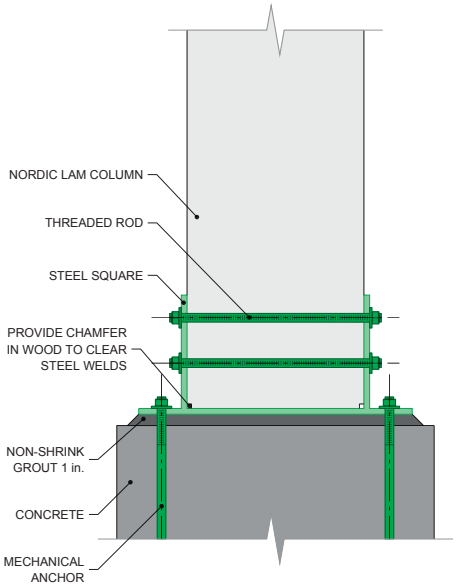

Structure, Base Plate | Base Plate with Knife Plate and Four Mechanical Anchors | NS-DS2038

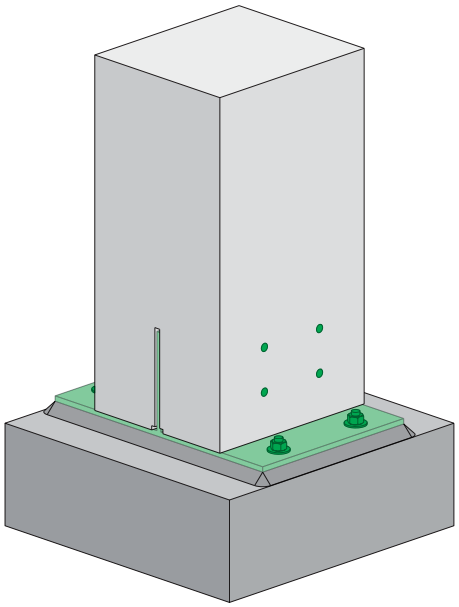

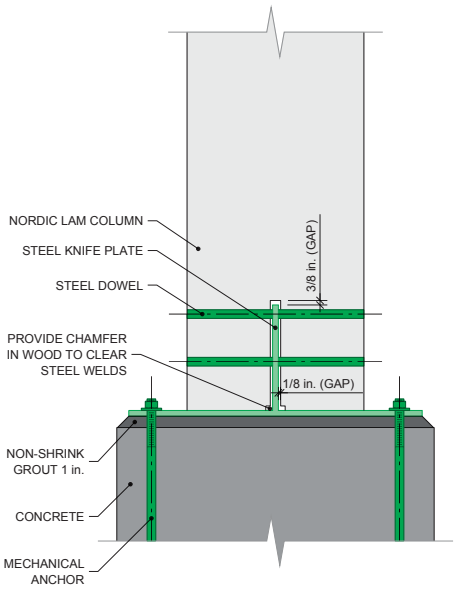

Structure, Base Plate | Base Plate with Knife Plate and Four Hidden Mechanical Anchors | NS-DS2039

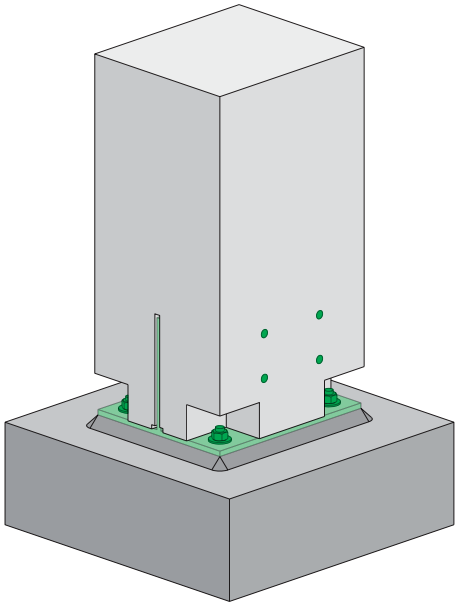

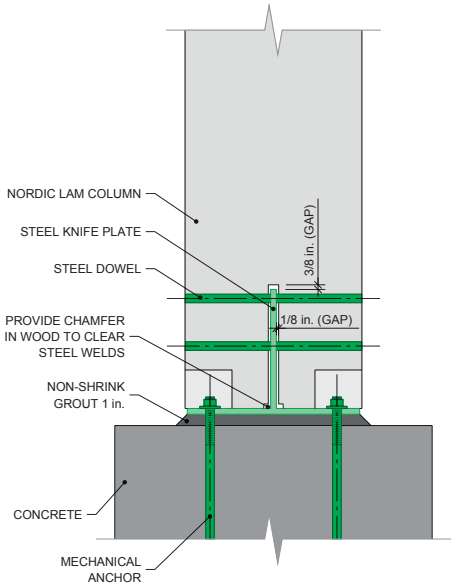

Structure, Base Plate | Two-storey Base Plate with Knife Plate | NS-DS2040

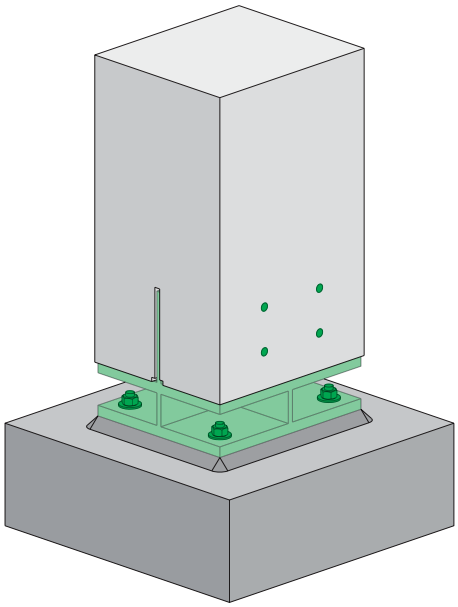

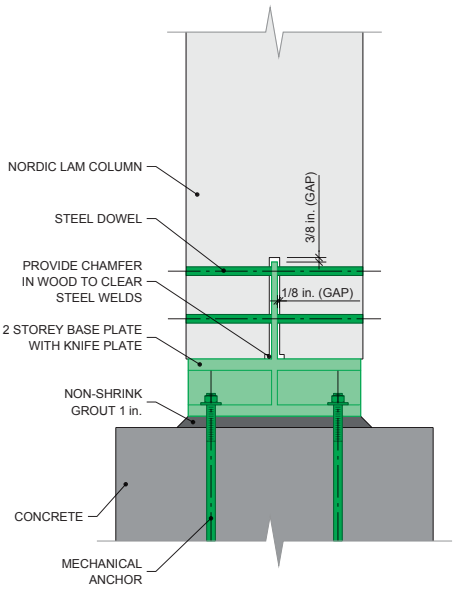

Structure, Base Plate | Two-storey Base Plate with Glued-in Rod | NS-DS2041

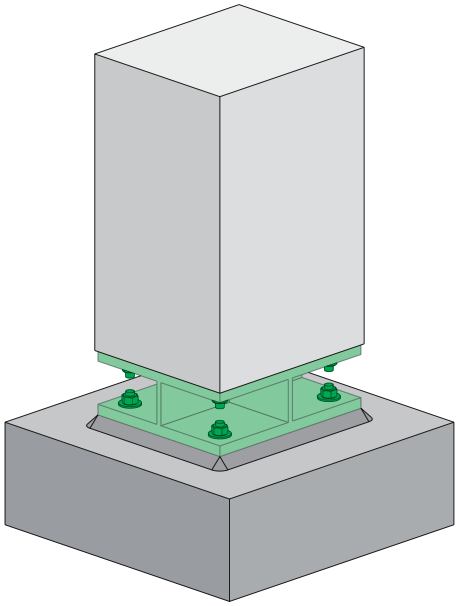

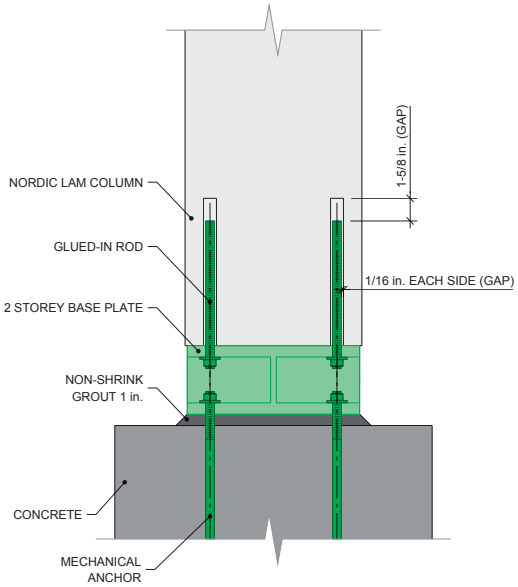

Structure, Base Plate | Two-storey Base Plate with Glued-in Rod and Pocket | NS-DS2042

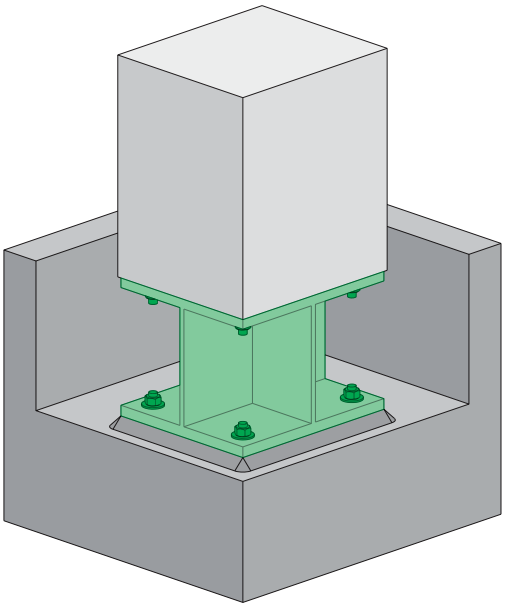

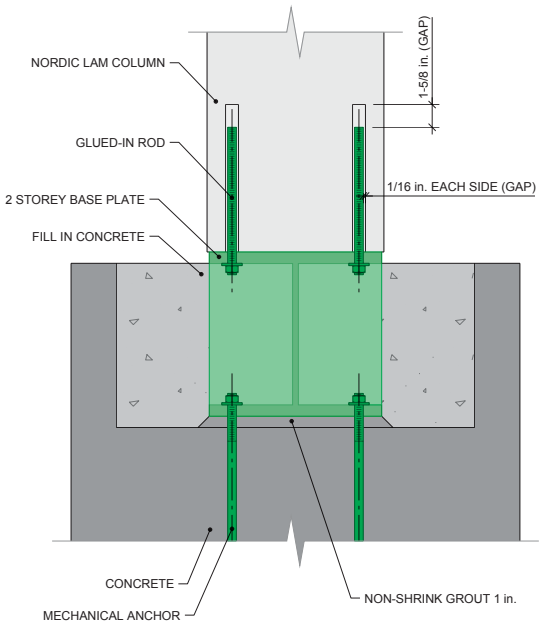

Structure, Beam-Column | Two-storey Base Plate with Glued-in Rod and Half-height Pocket | NS-DS2070

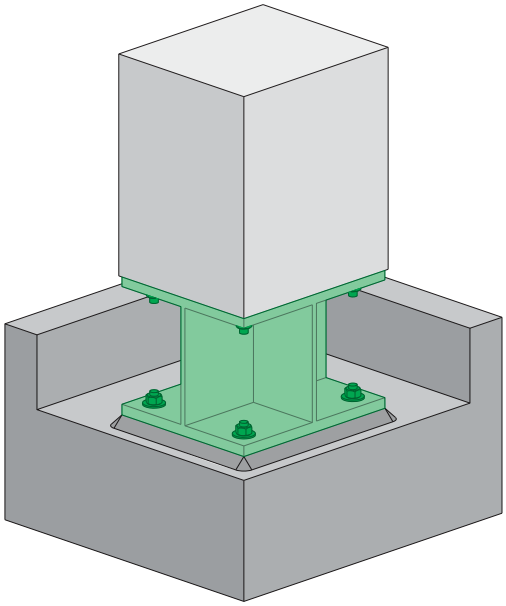

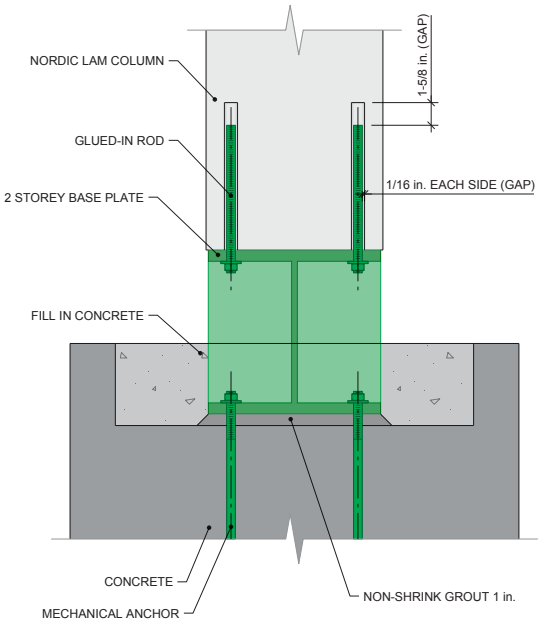

Structure, Beam-Column | Double Member Beam with Spacing | NS-DS2043

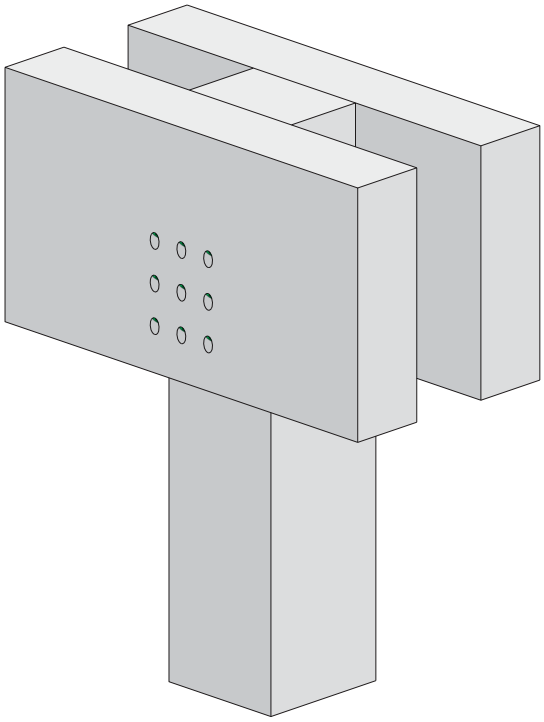

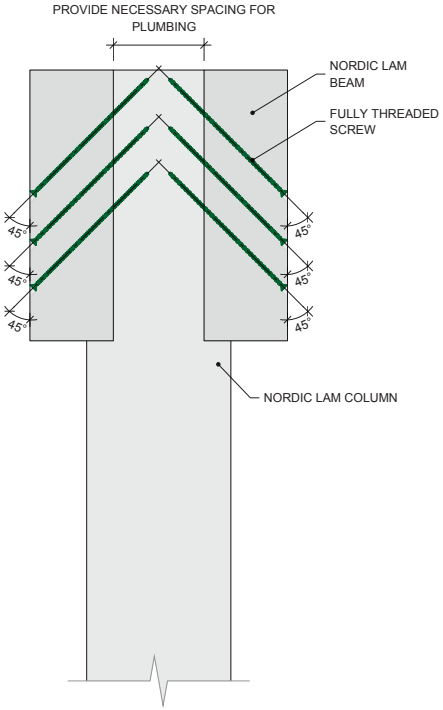

Structure, Beam-Column | Double Member Beam Without Spacing | NS-DS2044

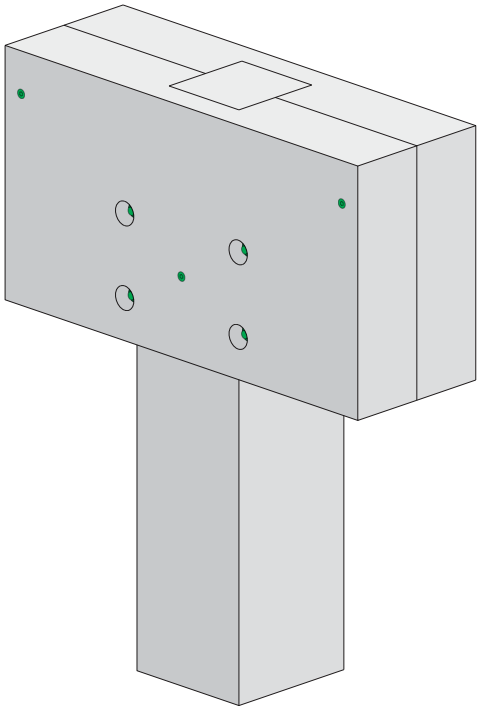

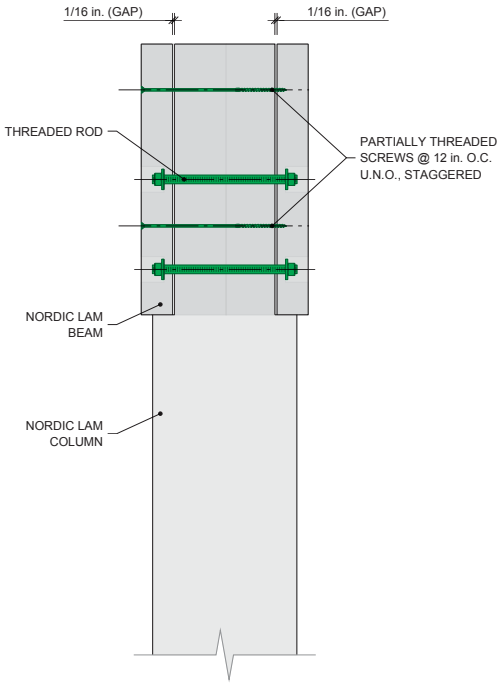

Structure, Beam-Column | Knife Plate with Shear Key | NS-DS2045

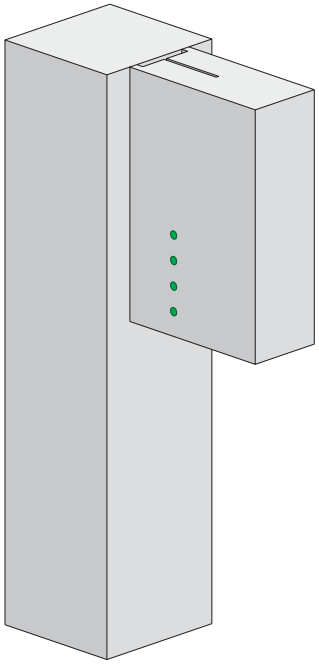

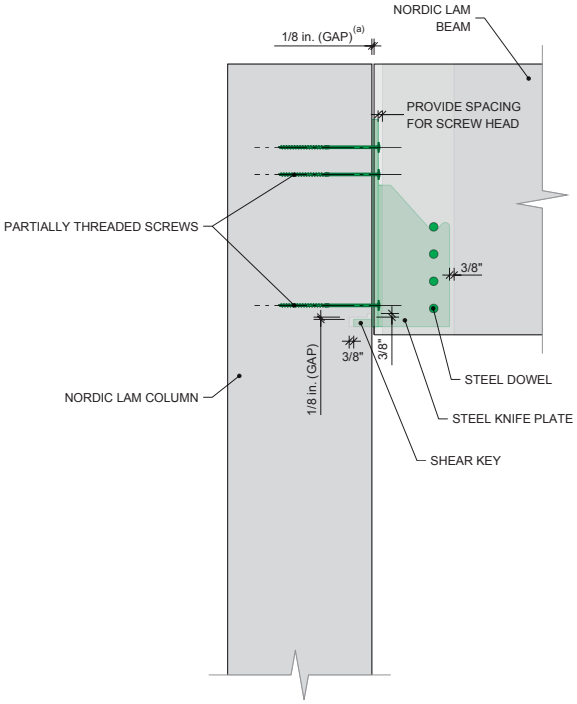

a) The 1/8 in. gap may not be required depending on the detail on the other side of the beam.

Structure, Beam-Column | Knife Plate with Shear Key and Bearing Plate | NS-DS2046

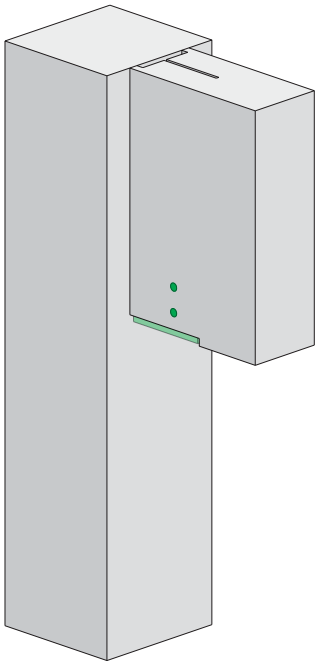

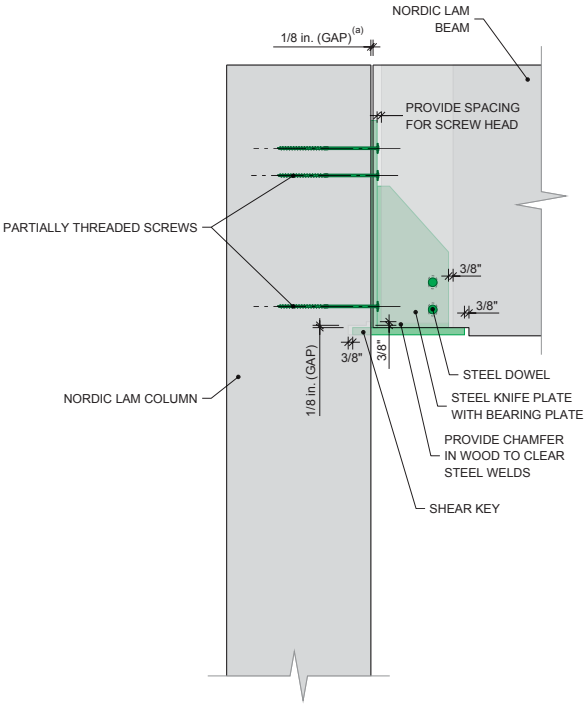

a) The 1/8 in. gap may not be required depending on the detail on the other side of the beam.

Structure, Beam-Column | Single Beam, Bridle Joint | NS-DS2047

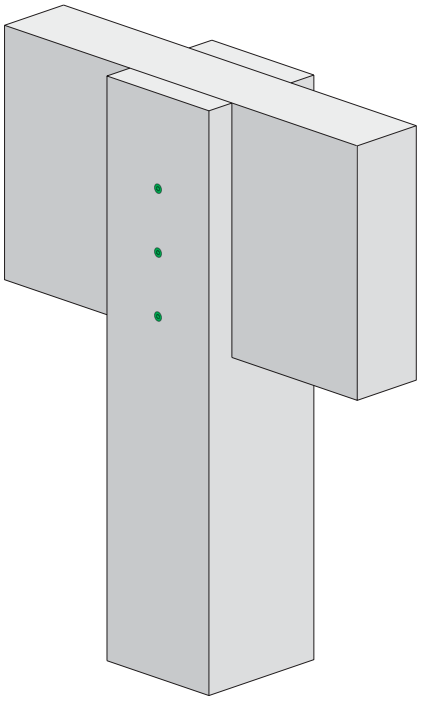

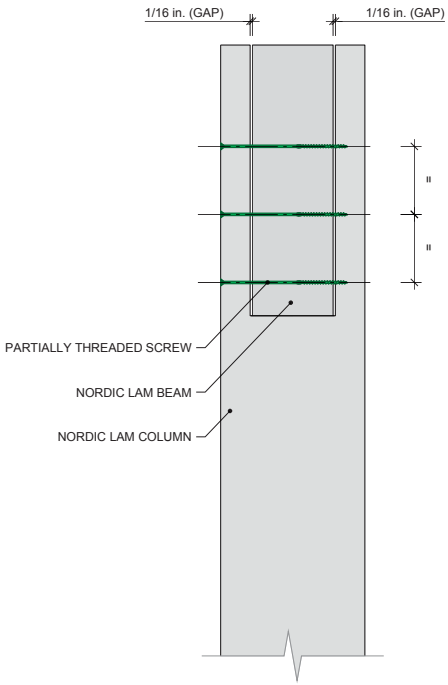

Structure, Beam-Column | Continuous Beam, Bridle Joint | NS-DS2048

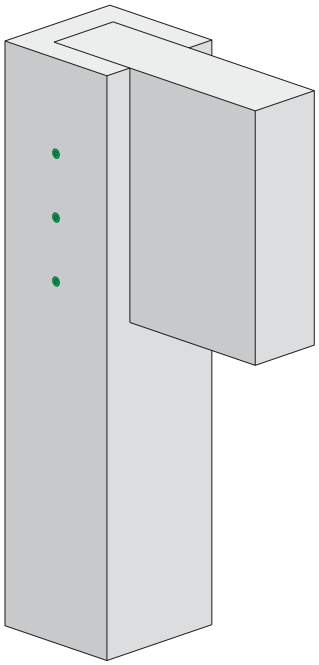

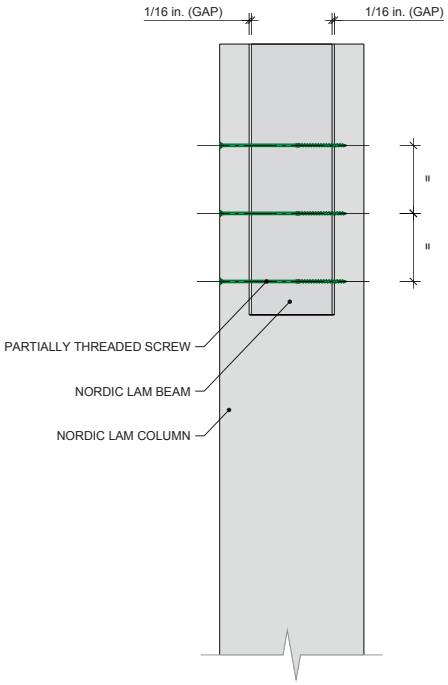

Structure, Beam-Column | Half-lap Joint | NS-DS2049

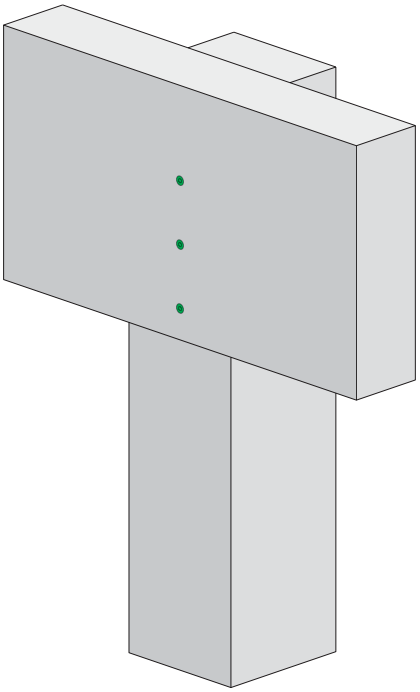

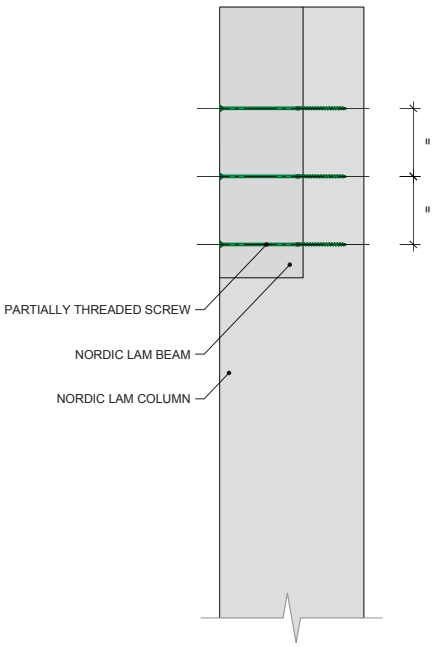

Structure, Beam-Column | Face-mount Hanger | NS-DS2050

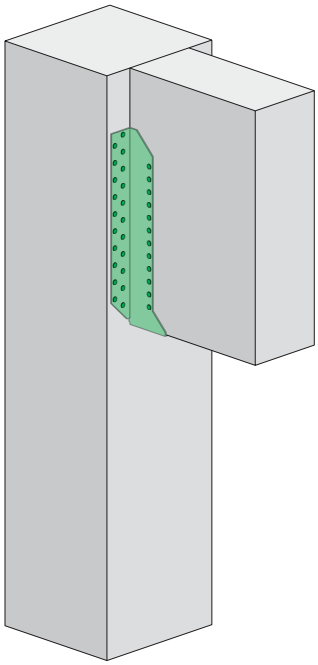

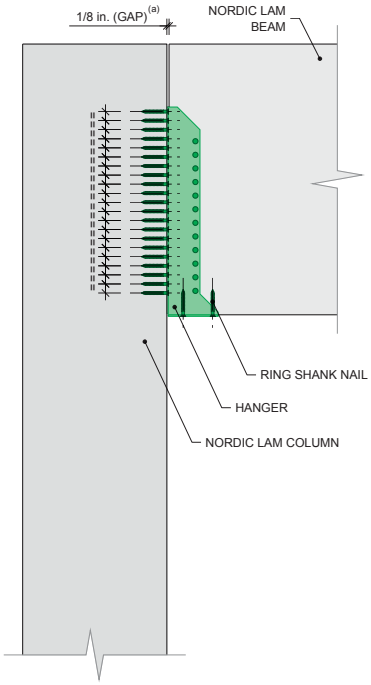

a) The 1/8 in. gap may not be required depending on the detail on the other side of the beam.

Structure, Beam-Column | Face-mount Hanger with Concealed Flanges | NS-DS2051

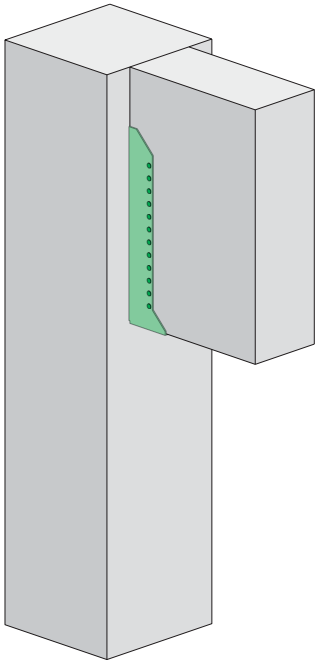

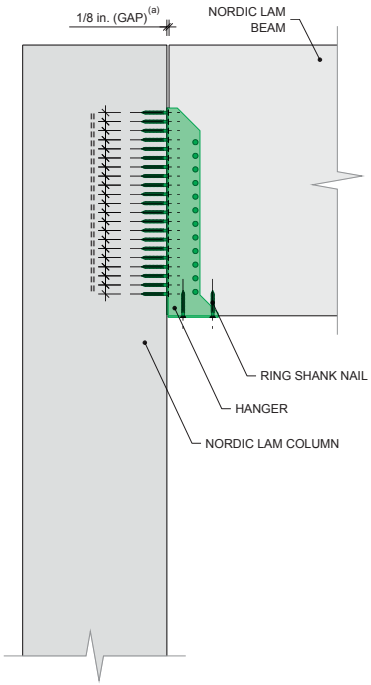

a) The 1/8 in. gap may not be required depending on the detail on the other side of the beam.

Structure, Beam-Column | Beam on Cleat | NS-DS2053

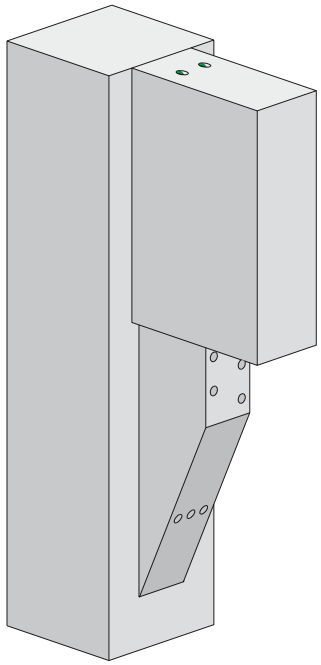

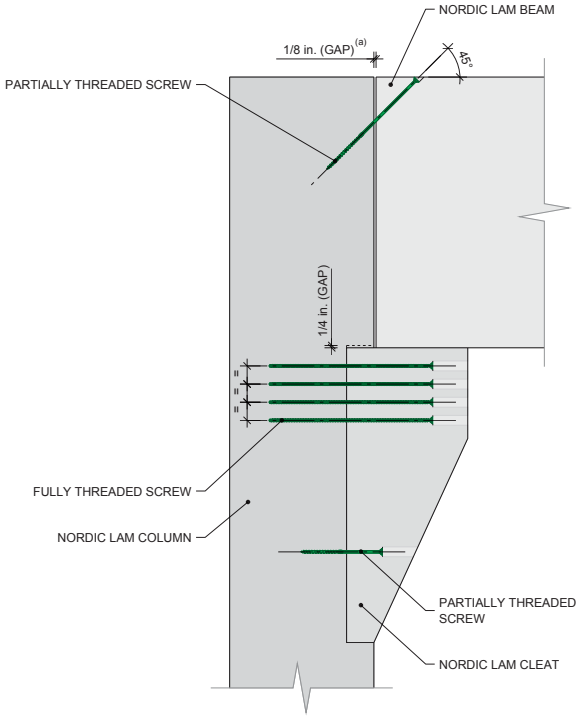

a) The 1/8 in. gap may not be required depending on the detail on the other side of the beam.

Structure, Girt-Column | Knife Plate | NS-DS2055

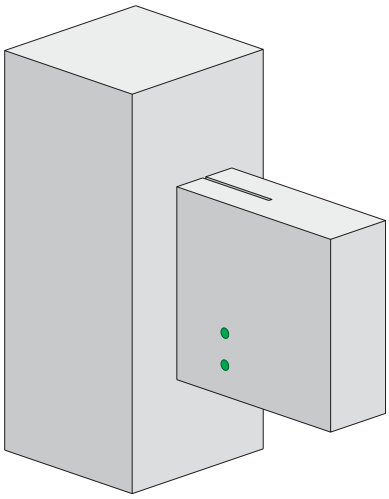

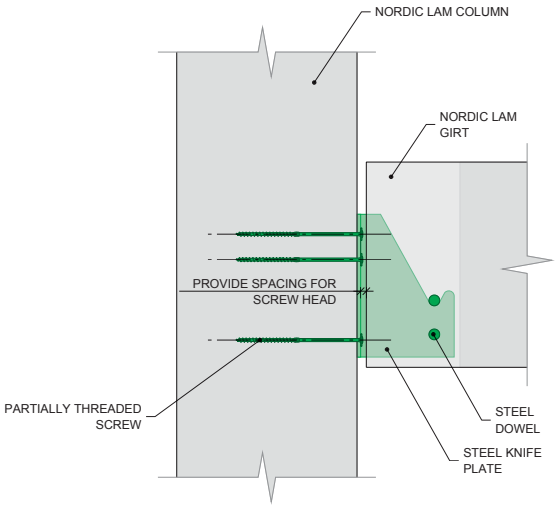

Structure, Girt-Column | Steel Plates | NS-DS2056

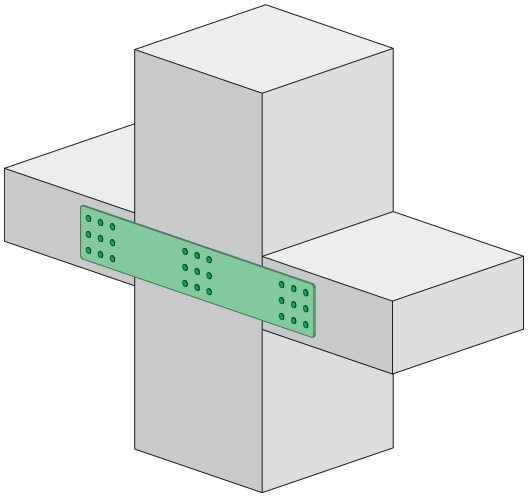

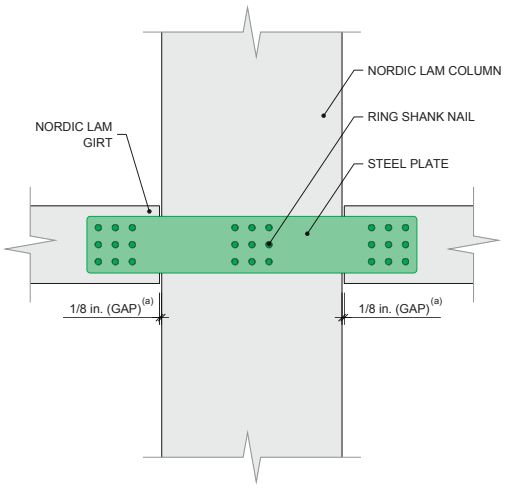

a) The 1/8 in. gap may not be required depending on the detail on the other side of the beam.

Structure, Girt-Column | 45° Screws | NS-DS2057

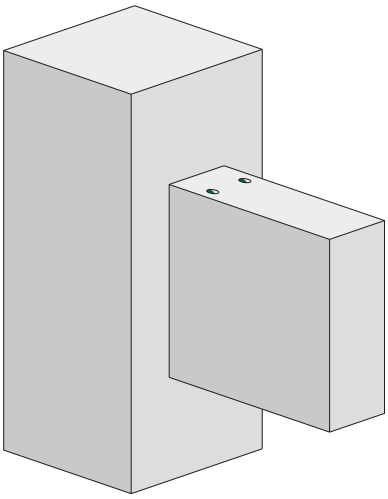

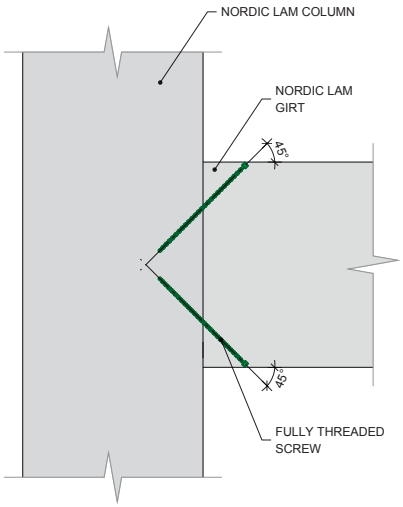

Structure, Joist-Beam | Nailed Face-mount Hanger | NS-DS2058

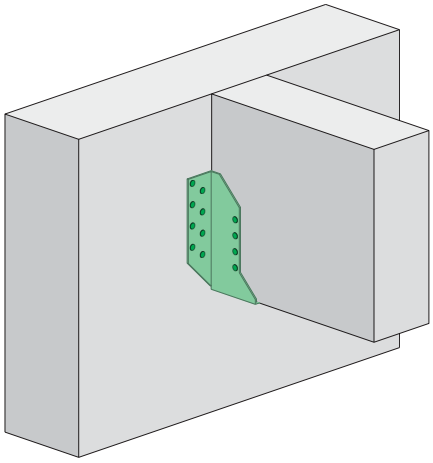

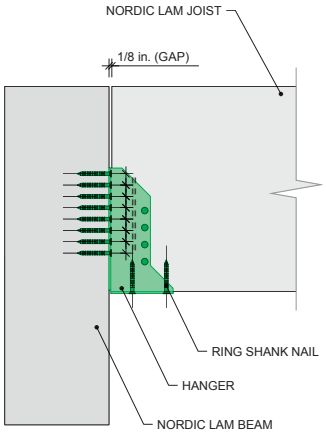

Structure, Joist-Beam | Nailed Face-mount Hanger with Concealed Flanges | NS-DS2059

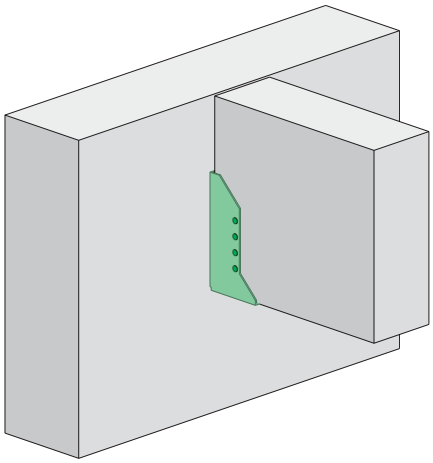

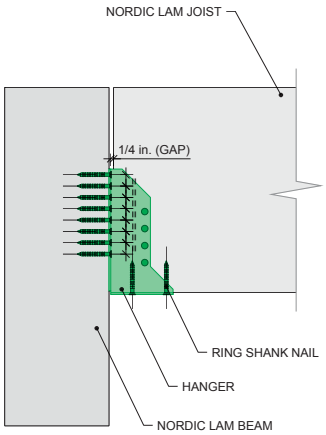

Structure, Joist-Beam | Bolted Face-mount Hanger | NS-DS2060

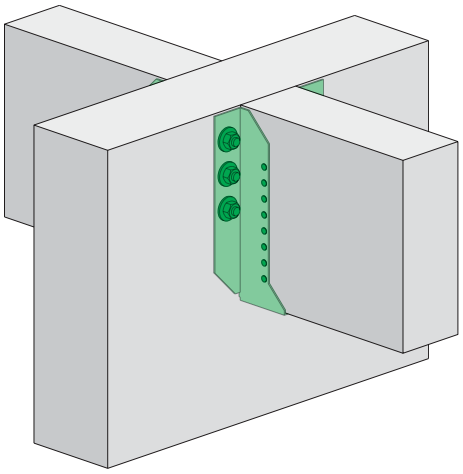

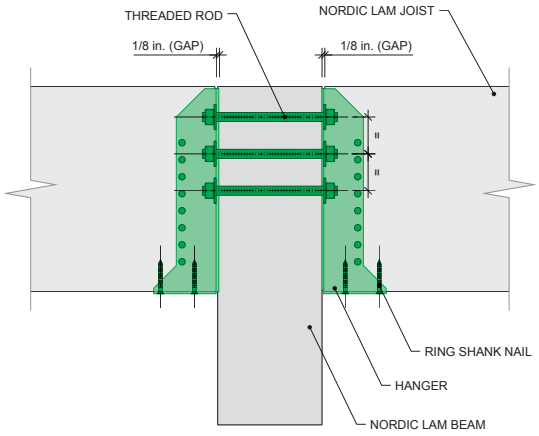

Structure, Joist-Beam | Knife Plate with Saddle | NS-DS2061

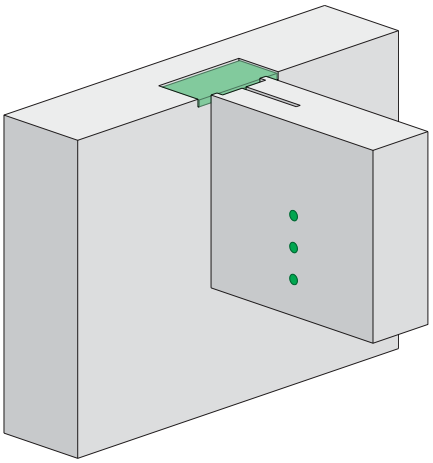

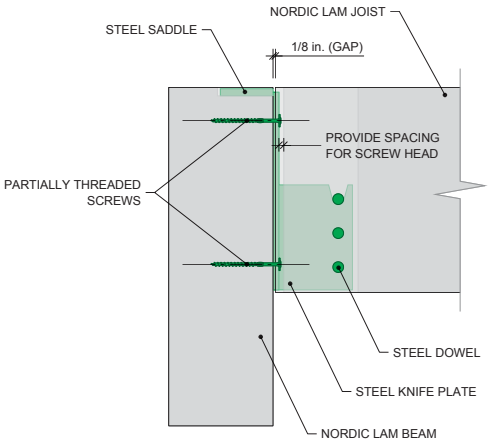

Structure, Joist-Beam | Knife Plate | NS-DS2062

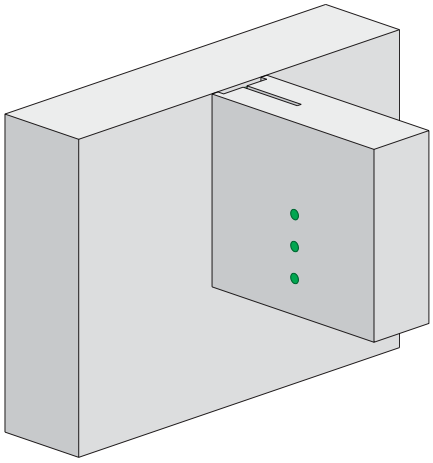

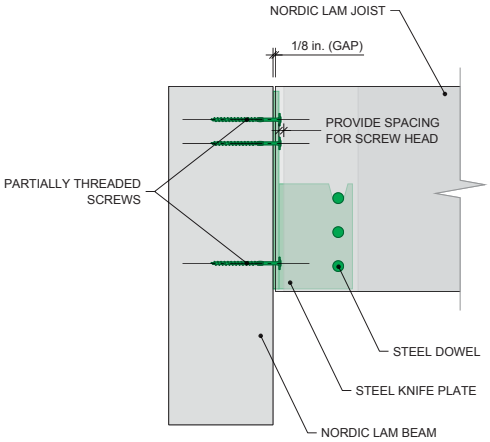

Structure, Joist-Beam | 45° Screws – Option 1 | NS-DS2063

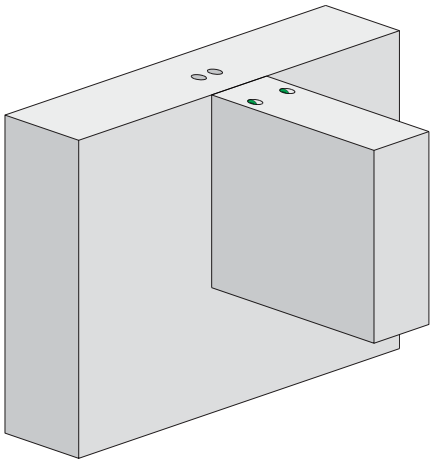

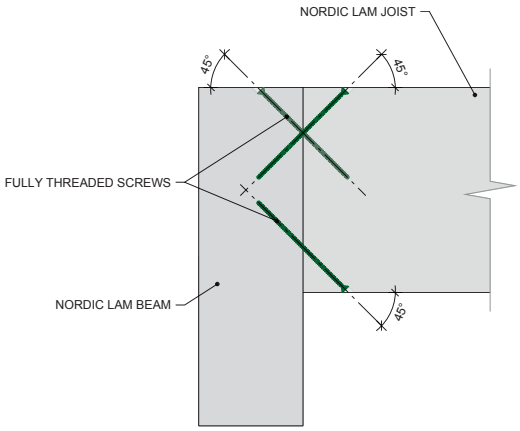

Structure, Joist-Beam | 45° Screws – Option 2 | NS-DS2064

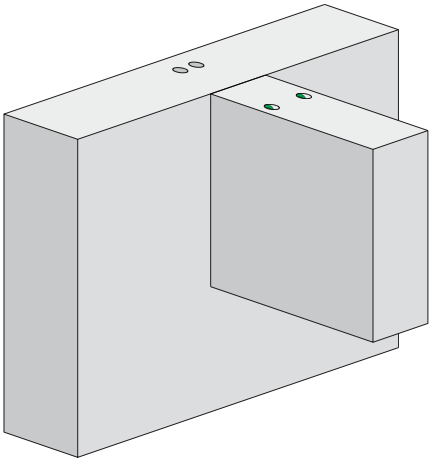

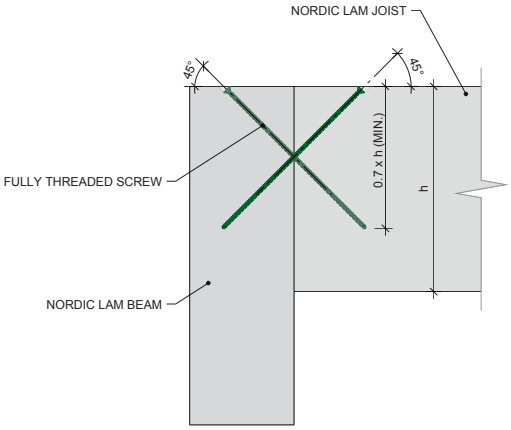

Structure, Joist-Beam | Joist on Beam with 45° Screws and Glued-in Rod | NS-DS2065

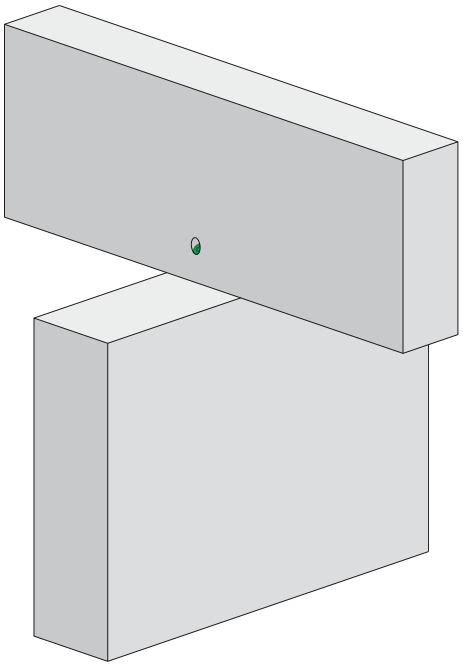

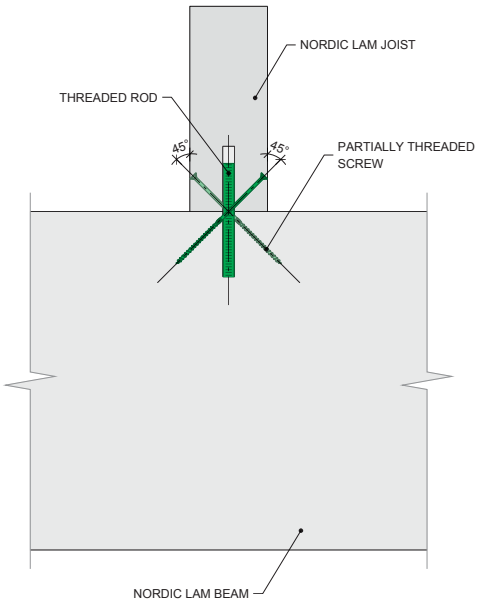

Mechanical, Electrical, and Plumbing | Vertical, Double-member Beam | NS-DS2501

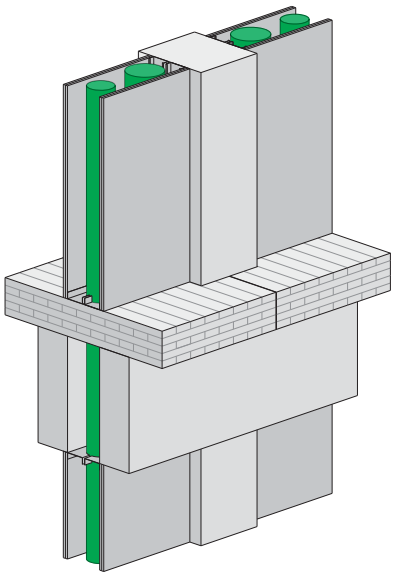

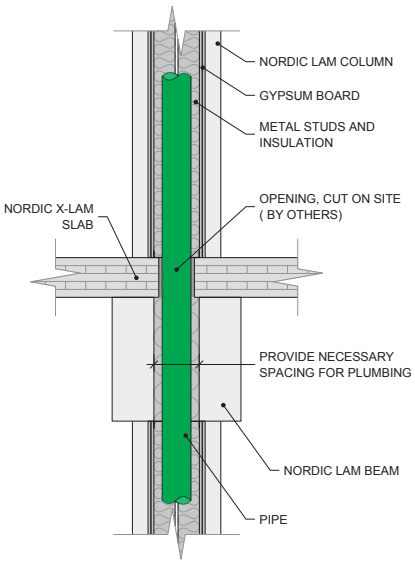

Mechanical, Electrical, and Plumbing | Horizontal, Joist on Beam | NS-DS2506

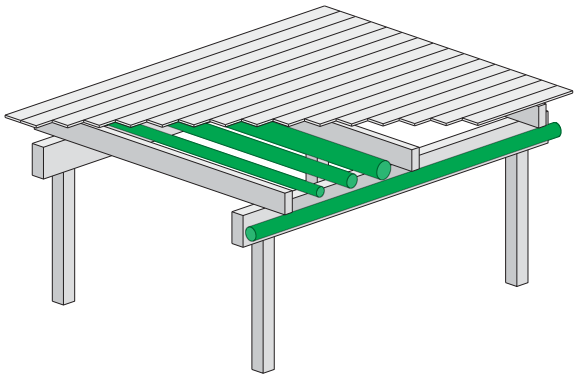

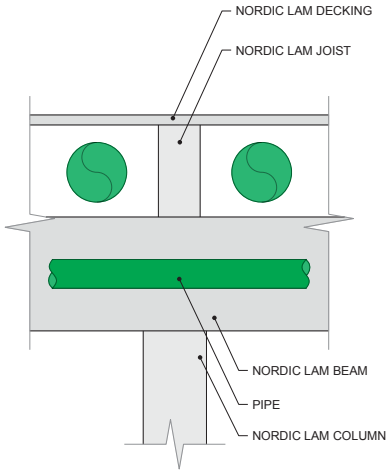

Mechanical, Electrical, and Plumbing | Horizontal, Bevelled Beam | NS-DS2507

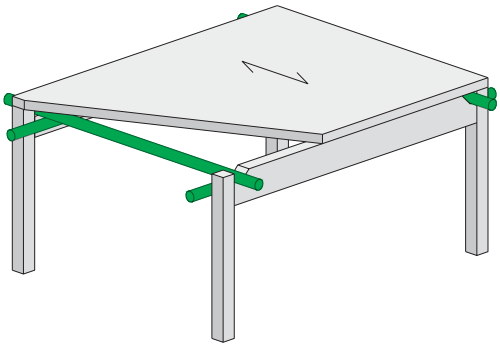

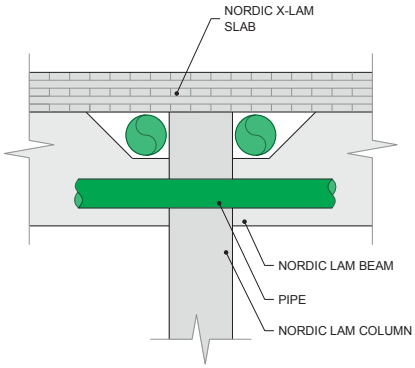

Mechanical, Electrical, and Plumbing | Multi-residential Unit Diagram – Option 1 | NS-DS2508

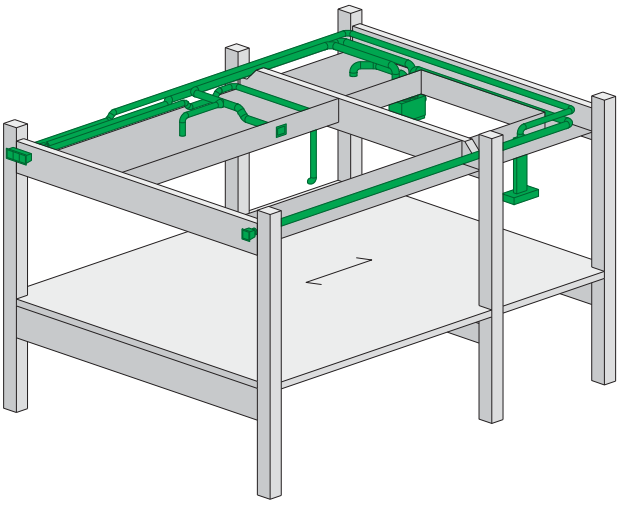

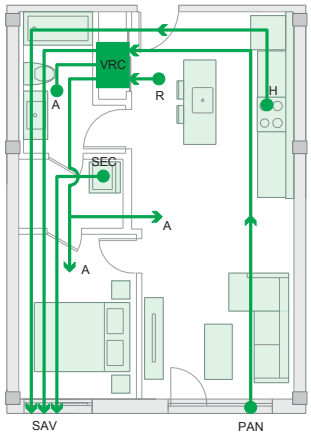

Légende

A	Grille ou diffuseur d'air
H	Hotte
PAN	Prise d'air neuf
R	Grille de retour
SAV	Sortie d'air vicié
SEC	Sécheuse
VRC	Ventilateur récupérateur de chaleur

Mechanical, Electrical, and Plumbing | Multi-residential Unit Diagram – Option 2 | NS-DS2509

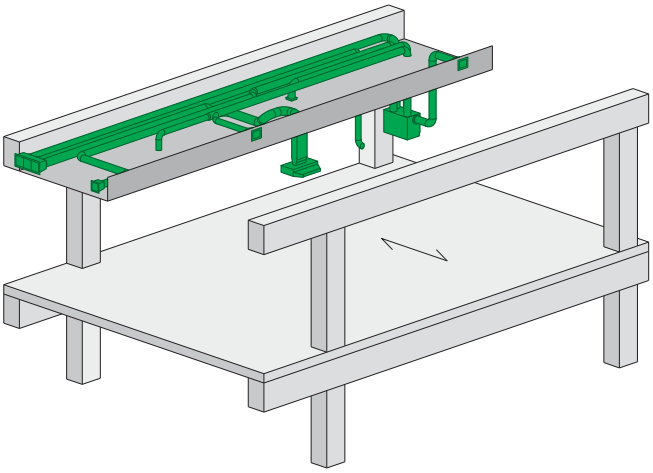

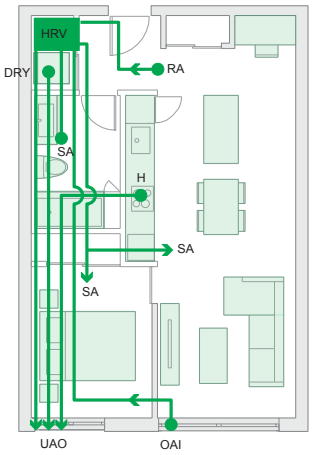

Legend

SA	Supply Air
H	Hood
OAI	Outdoor Air Intake
RA	Return Air
UAO	Used Air Outlet
SEC	Dryer
HRV	Heat Recovery Ventilator

NORDIC

TECHNICAL GUIDE
NORDIC LAM+

NS-GT5

ASD

VERSION
2022-02-01

ARCHITECTURAL DETAILS

4

NORDIC
STRUCTURES

GENERAL NOTES

1.0 General

1.1 This document supersedes all previous versions. For the latest version, consult nordic.ca or contact Nordic Structures.

1.2 The information contained in this document is provided for information purposes only. This information should not be used for any application without examination and verification of its accuracy, suitability and applicability by a licensed engineer, architect or other professional. Nordic Structures does not guarantee that the information is suitable for any general or particular use, and assumes no responsibility for the use, application of and/or reference to the information.

1.3 Certain commercial products are identified in this document in order to properly represent the test procedure. In no case does such identification imply recommendations or endorsement by Nordic Structures, nor does it imply that the product or material identified is the best available for the purpose.

1.4 For more information, consult nordic.ca or contact Nordic Structures.

2.0 Fire Safety

2.1 The fire resistance rating (FRR) is determined using the design methodology specified in the National Design Specification (NDS) for Wood Construction 2015. The fire resistance rating may also be determined on the basis of the results of tests conducted in conformance with ASTM E119, Standard Test Methods for Fire Tests of Building Construction and Materials.

2.2 To determine the fire resistance of an element or assembly according to other assumptions than those specified in this document, consult the Nordic X-Lam technical guide or use Nordic Sizer software.

2.3 The fire performance criteria for evaluating the separating function of building elements shall be considered when required by the applicable building code.

2.4 For this purpose, among other requirements, many firestop systems suitable for mass timber are available. For more details, consult the product suppliers.

2.5 Additional references: Fire-Resistance-Tested Mass Timber Assemblies and Penetrations.

3.0 Envelope

3.1 Good thermal insulation is never arbitrary and must always be chosen according to location, area and climate.

3.2 The total thermal resistance of an assembly is calculated according to the values of thermal conductivity, λ, and thermal resistance, R, indicated in the following table.

3.3 To convert the thermal resistance of the International System (RSI) [m²K/W] to the R-value [ft²Fh/BTU], divide the RSI value by 0.1761.

3.4 As stated in technical note NS-NT602-US, Nordic X-Lam cross-laminated timber acts as a vapor barrier.

3.5 The use of closed cell spray polyurethane is not recommended for exterior wall assemblies made of cross-laminated timber because of its low permeability.

3.6 The study of the building envelope, including the control of condensation, the transfers of heat, air, moisture and sound, as well as the details of joining and fixing of the coverings, shall be carried out in accordance with the applicable building code.

GENERAL NOTES (CONTINUED)

Thermal Resistance of Materials

Product	t (in.)	λ (BTU/ftFh)	R (ft²Fh/BTU)
Nordic Lam	1	0.0751	1.11
Nordic X-Lam	1	0.0751	1.11
Sawn lumber	1	0.0693	1.20
Spray polyurethane (BASF)	2	0.0116	14.2
Stone wool (Rockwool ComfortBatt R24)	5-1/2	0.0191	24.0
Gypsum board	1/2	0.0919	0.45
Polyisocyanurate (SOPRA-ISO)	-	0.0144	-
Air cavity – Wall	1/2 to 3/4	-	0.91
Air cavity – Ceiling	1/2 to 1-5/8	-	0.85
	1-5/8 to 3-1/2	-	0.91
Interior air film – Wall	-	-	0.68
Interior air film – Ceiling	-	-	0.62
Exterior air film	-	-	0.17

References: Test Report AT-00205 (AIR-INS inc.), Wood Handbook (FPL, 2010), Evaluation Listing CCMC 13588-L (2011), Technical Data Sheet (Rockwool, 2017), Technical Data Sheet 190304SCANE (Soprema, 2019) and Table A-9.36.2.4.1.1)-D of NBC 2015.

4.0 Acoustics

4.1 The Sound Transmission Class (STC) rating describes the performance of the separating wall or floor/ceiling assembly, whereas the Field Sound Transmission Class (FSTC) takes into consideration the performance of the separating element as well as the flanking transmission paths. Also, building professionals should ensure that floors are designed to minimize impact transmission. For more details, see the IBC 2018, Section 1206.

4.2 The following pages present separating assemblies that may comply with the applicable building code. However, selecting an appropriate separating assembly is only one part of the solution for reducing airborne sound transmission between adjoining spaces: to fully address the sound performance of the whole system, flanking assemblies must be connected to the separating assembly. For more details, see the Nordic X-Lam Technical Guide.

4.3 Unless otherwise noted, concrete topping and prefabricated concrete topping used in assemblies have a density of 2,710 kg/m³.

4.4 The use of prefabricated concrete topping in floor assemblies is only required by the acoustical testing procedure.

4.5 The use of an acoustic membrane under a floor covering is recommended, especially when it is a hard surface coating (e.g. ceramic).

4.6 Unless otherwise noted, the acoustic performance values are derived from test results from a certified laboratory. Test reports are available upon request.

4.7 Additional references:
- WoodWorks – Acoustics and Mass Timber: Room-to-Room Noise Control
- WoodWorks – Acoustically-Tested Mass Timber Assemblies
- University of Oregon – Acoustic Lab Testing of Typical Multi-Family Residential Wall and Floor Assemblies

Architecture, Assembly | Floor | NS-DA2218

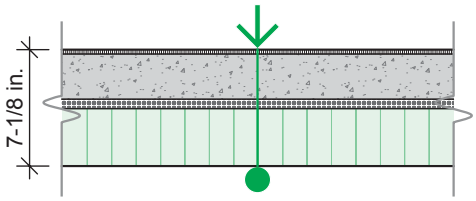

F19

Fire-resistance rating	FRR [a]	1 h	
Thermal resistance	RSI / R	n.a.	/ n.a.
Acoustic ratings	STC / FSTC	52	/ n.a.
	IIC / FIIC	51	/ n.a.

a) The fire-resistance rating is based on a span of 12 feet and on a uniform load of 90 psf.

- CARPET TILES 1/4 in.
- PREFABRICATED CONCRETE TOPPING (144 pcf) 2-3/4 in.
- UNDERLAY OF TYPE “INSONOMAT” 5/8 in.
- NORDIC LAM DECKING 3-1/2 in.

Architecture, Assembly | Floor | NS-DA2234

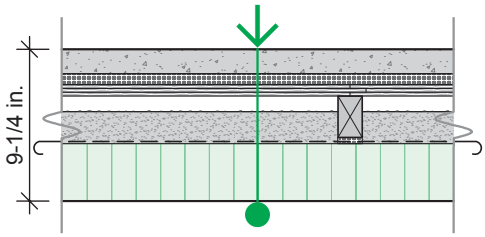

F35

Fire-resistance rating	FRR [a]	1 h	
Thermal resistance	RSI / R	n.a.	/ n.a.
Acoustic ratings	STC / FSTC	65	/ n.a.
	IIC / FIIC	59	/ n.a.

a) The fire-resistance rating is based on a span of 12 feet and on a uniform load of 90 psf.

- PREFABRICATED CONCRETE TOPPING 1-1/2 in.
- UNDERLAY OF TYPE “REGUPOL SONUS WAVE” 5/8 in.
- TONGUE AND GROOVE OSB SHEATHING 3/4 in.
- WOOD RAFTERS 2 in. X 3 in. @ 24 in. O.C.
- SILICA SAND (#71) 2 in.
- RUBBER MEMBRANE BANDS 3/8 in. UNDER RAFTERS
- POLYETHYLENE SHEETING 6 mil
- NORDIC LAM DECKING 3-1/2 in.

Architecture, Assembly | Floor | NS-DA2240

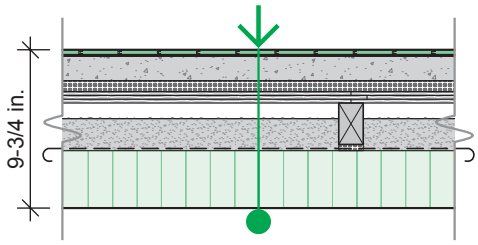

F41

Fire-resistance rating	FRR [a]	1 h	
Thermal resistance	RSI / R	n.a.	/ n.a.
Acoustic ratings	STC / FSTC	65	/ n.a.
	IIC / FIIC	62	/ n.a.

a) The fire-resistance rating is based on a span of 12 feet and on a uniform load of 90 psf.

- LAMINATED FLOORING 3/8 in.
- UNDERLAY OF TYPE “ROBERTS SOFT STRIDE” 1/8 in.
- PREFABRICATED CONCRETE TOPPING 1-1/2 in.
- UNDERLAY OF TYPE “REGUPOL SONUS WAVE” 5/8 in.
- TONGUE AND GROOVE OSB SHEATHING 3/4 in.
- WOOD RAFTERS 2 in. X 3 in. @ 24 in. O.C.
- SILICA SAND (#71) 2 in.
- RUBBER MEMBRANE BANDS 3/8 in. UNDER RAFTERS
- POLYETHYLENE SHEETING 6 mil
- NORDIC LAM DECKING 3-1/2 in.

Architecture, Assembly | Roof | NS-DA2309

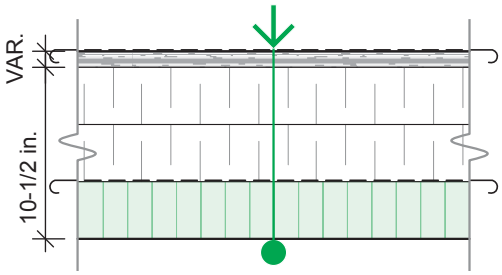

R10

Fire-resistance rating	FRR [a]	1 h	
Thermal resistance	RSI / R	7.8	/ 44
Acoustic ratings	STC / FSTC	n.a.	/ n.a.
	IIC / FIIC	n.a.	/ n.a.

a) The fire-resistance rating is based on a span of 12 feet and on a uniform load of 90 psf.

- TWO-LAYER ELASTOMERIC MEMBRANE ROOFING
- ROOFING UNDERLAY (UP TO THE DESIGNER)
- 2 ROWS OF POLYISOCYANURATE INSULATION 3-1/2 in. EA.
- VAPOR BARRIER MEMBRANE
- PLYWOOD 1/2 in.
- NORDIC LAM DECKING 3-1/2 in.

NORDIC

TECHNICAL GUIDE
NORDIC LAM+

NS-GT5

ASD

VERSION
2022-02-01

ADDITIONAL INFORMATION 5

NORDIC
STRUCTURES

Software

Nordic Sizer

Nordic Sizer is a software program built to design individual structural elements (joists, beams, columns, studs, slabs, and panels) using the full range of Nordic engineered wood products.

Nordic Sizer software application analyzes and designs members for specified loads in accordance with CSA O86 (Canada) or NDS (United States) standard, and automatically checks load cases and load combinations in accordance with NBC (Canada) or IBC (United States). Features include floor vibration checks and fire resistance calculations.

For more information: http://woodworks-software.com

DOWNLOAD & INSTALL
Fill in the form (contact.nordic.ca/en/nordic-sizer-software-request/) to receive instructions by email within the next business day.
For assistance, please contact the technical support at 514-871-8526, ext. 2 or tech@nordic.ca.

WOODWORKS SOFTWARE TUTORIALS
US Training Videos and User Guide
woodworks-software.com/support/support-us-edition/

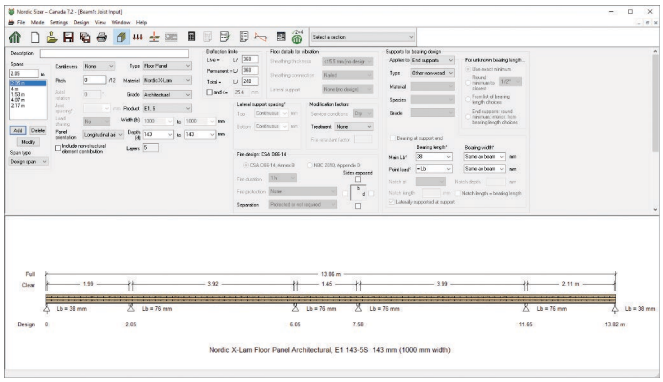

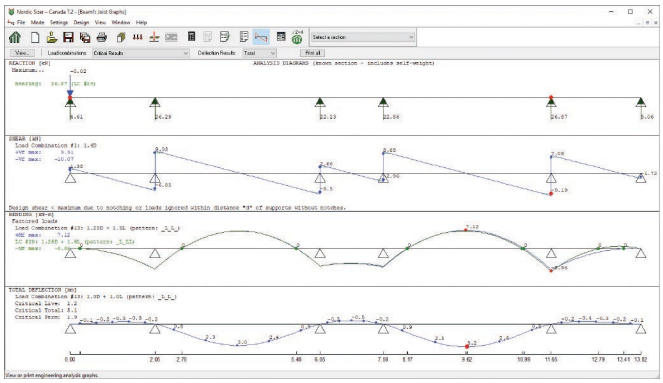

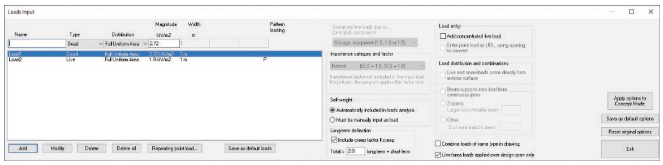

NORDIC STRUCTURES

COMPANY	PROJECT
Aug. 12, 2020 15:47	Beam1

Design Check Calculation Sheet
Nordic Sizer – Canada 7.2

Loads:

Load	Type	Distribution	Pat-tern	Location [m] Start	End	Magnitude Start	End	Unit
Load1	Dead	Full Area	No			2.72(1.00m)		kN/m2
Load2	Live	Full Area	Yes			1.90(1.00m)		kN/m2
Self-weight	Dead	Full UDL	No			0.72		kN/m

Maximum Reactions (kN), Bearing Resistances (kN) and Bearing Lengths (mm) :

13.86 m

0 2.05 6.05 7.58 11.65 13.82 m

Unfactored:							
Dead	1.54	12.59	9.22	9.56	12.87	1.79
Live	1.79	7.04	7.14	7.28	7.19	1.88
Factored:							
Uplift	0.02					
Total	4.61	26.29	22.23	22.86	26.87	5.06
Bearing:							
Capacity							
Beam	161.54	282.46	305.35	304.13	282.38	161.54
Des ratio							
Beam	0.03	0.08	0.06	0.07	0.08	0.03
Load case	#24	#14	#25	#16	#29	#24
Length	38*	76	76	76	76	38*
Min req'd	38*	76*	76*	76*	76*	38*
KB	1.00	1.00	1.00	1.00	1.00	1.00
KB min	1.00	1.00	1.00	1.00	1.00	1.00
KD	1.00	0.87	0.94	0.94	0.87	1.00

*Minimum bearing length for panels is 38 mm for exterior supports and 76 mm for intermediate supports

Nordic X-Lam Floor Panel Architectural, E1 143-5S 143 mm (1000 mm width)
Supports: All - Non-wood
Total length: 13.858 m; Clear span: 2, 3.9, 1.5, 4, 2.1 m; Volume = 1.982 m^3; Panel orientation: Longitudinal axis
This section PASSES the design code check.

Limit States Design using CSA O86-14:

Criterion	Analysis Value	Design Value	Unit	Analysis/Design
Shear	Vf @d = 9.19	Vr = 27.95	kN	Vf/Vr = 0.33
Moment(+)	Mf = 7.12	Mr = 58.05	kN-m	Mf/Mr = 0.12
Moment(-)	Mf = 8.86	Mr = 56.95	kN-m	Mf/Mr = 0.16
Perm. Defl'n	1.9 = < L/999	11.3 = L/360	mm	0.17
Live Defl'n	1.2 = < L/999	11.3 = L/360	mm	0.11
Total Defl'n	5.1 = L/798	17.0 = L/240	mm	0.30
Vibration	Lmax = 4.070	Lv = 5.186	m	Lmax/Lv = 0.78

+ architectural details →DA2

+ structural details →DS2

+ installation guide →GI2

+ maintenance guide →GE2

+ product warranty →N-X601